Product: **Multi-layer diaphragm pump**

Type: **M… R… RF…**

...409.2 - 11 ML
...409.2 - 17 ML

...409.2 - 30 ML
...409.2 - 45 ML

...409.2 - 72 ML
...409.2 - 110 ML

...409.2 - 150 ML
...409.2 - 220 ML

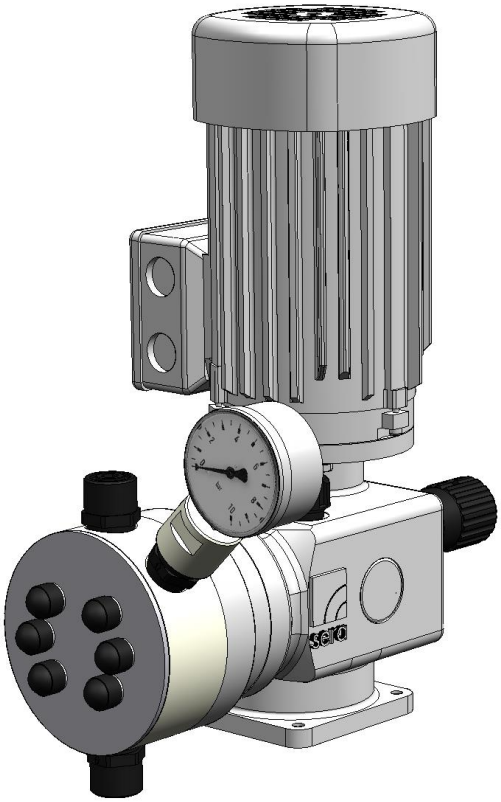

Please state here the exact type and serial number of your pump. (can be read off the type plate on the pump)
Type:
Serial-No.:
These data are important in case of queries or for ordering spare and wearing parts and must absolutely be stated.

Manufacturer:

Seybert & Rahier
GmbH + Co. Betriebs-KG
sera-Straße 1
34376 Immenhausen
Germany
Tel. +49 5673 999-00
Fax. +49 5673 999-01
www.sera-web.com
info@sera-web.com

CAUTION !

Keep the operating instructions for future application!

Content:

1 General

Before commissioning and during operation of the **sera** - Multi-layer diaphragm pump it is necessary to follow the relevant local instructions.

The **sera** - multi-layer diaphragm pump is delivered ready for connection. Carefully read these instructions and especially the safety instructions herein contained before putting the diaphragm pump into service.

2 Types

2.1 Model key

Example:

Multi-layer diaphragm pump Type **R 409.2-17 ML**

R	409.2	17	ML

Information for adjustment

M not adjustable
R manual adjustable (stroke length adjustment)
F with three phase motor, suitable for operation with frequency converter

(Combination ‚**RF**' is possible!)

R	**409.2**	17	ML

Indication of type series/stroke drive

R	409.2	**17**	ML

Indication of nominal delivery rate

This number states the nominal delivery rate in litres/hour.
(standard version referring to water)

R	409.2	17	**ML**

Indication of the execution of the plug-in pump

ML Execution Multi-layer diaphragm

2.2 Type plate

Each **sera** multi-layer diaphragm pump is factory provided with a type plate. The following information can be found on this type plate.

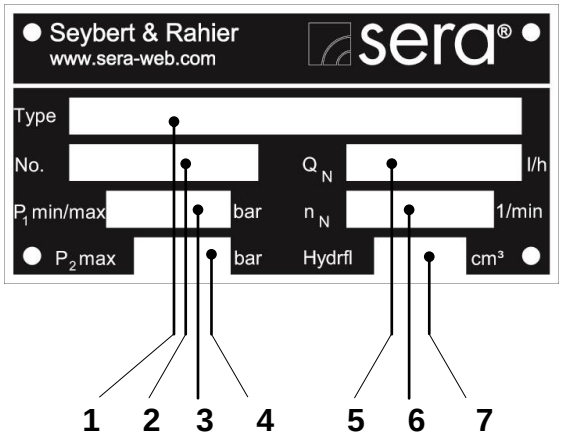

Fig. 01 Type plate

Explanation of the indications on the type plate		
1	Typ	**Pump type**
2	Nr.	**Serial-No. (Pump)**
3	P_1min/max [bar]	**Minimum/maximum permissible pressure in the pump inlet** Minimum/maximum permissible pressure in the inlet cross section which the pump is applicable for. Please consider that the pressure depends on rotation speed, delivery rate, temperature and static pressure at inlet.
4	P_2max [bar]	**Maximum permissible pressure in the pump outlet** Maximum permissible pressure in the outlet cross section which the pump is applicable for. Please consider that the pressure depends on rotation speed, delivery rate, temperature and static pressure at outlet.
5	Q_N l/h	**Nominal delivery rate** Delivery rate which the pump was ordered for, based on the nominal rotation speed n_N, the nominal delivery height $p_2$max. and the dosing medium stated in the supply contract.
6	n_N 1/min	**Nominal stroke frequency** for
7	Hydrfl. [cm^3]	**Buffer fluid** Quantity of buffer fluid in the diaphragm ring (in the case of double diaphragm pumps)

Tab. 01 Designation type plate

2.3 Materials

The materials used are indicated in the order confirmation.

2.4 Viscosity, dosing medium

The multi-layer diaphragm pump is suitable for fluids with viscosities < 100 mPas.

2.5 Dosing range

The flow capacity of the multi-layer diaphragm pump can be controlled manually via the stroke length adjustment (0...100%) The linear dosing range is between 20…100%

2.6 Noise test

The measured sound pressure level acc. to DIN 45635 for the diaphragms pumps is between 50 and 60 dB (A).

3 Safety instructions

CAUTION !

If the pump should be operated in explosion-hazardous areas, please also note the instructions in Chapter 9!

3.1 Quality instructions

Observance of these operating instructions and, in particular, safety instructions, helps to

- Avoid danger to staff, machines, and environment.
- Increase the reliability and service life of the equipment and the entire installation.
- Reduce expenses for repairs and downtimes.

The **sera** quality management and quality assurance system for pumps, installations, fittings and compressors is certified according to ISO 9001:2008.
The **sera** - multi-layer diaphragm pump is compliant with the valid safety requirements and accident prevention regulations

CAUTION !

Always keep these operating instructions within reach at the workplace!

CAUTION!

Pay attention to the safety data sheet of the medium conveyed! Take appropriate accident prevention measures to avoid that operators are endangered by the used conveying media!

3.2 Marking of instructions

3.2.1 Marking of instructions (operating manual)

Special notes in these operating instructions are marked with the general danger symbol

(safety symbol according to DIN 4844 – W9)

The safety sign appears in the following cases:

- If improper observance or non-observance of the operating manual, work instructions, specified operating procedures and similar can lead to personal injury or accidents.
- If improper observance or non-observance of the operating manual, work instructions, specified operating procedures and similar can lead to damage to property.
- Due to danger of causticization personnel must wear protective clothing (safety goggles, safety gloves and safety apron) for maintenance and repair work on parts which come into contact with hazardous products or for changing the containers.

3.2.2 Marking of instructions (Product)

Information signs which are directly attached to the pump, such as arrows indicating the direction of rotation or signs for fluid connections must be adhered to and kept in a legible condition.
This especially applies to the type plate of the pump.

3.3 Qualification and training of personnel

The personnel who operate, maintain, carry out inspections or install the machine must be suitably qualified for their tasks. The operator has to define clearly the responsibility, and the supervision of the personnel. If the personnel do not have the knowledge required, then the operator has to carry out corresponding training and instructions. Such a training can be realized - if required - upon order of the operator of the machine by the manufacturer / supplier. The operator has to ensure furthermore that the personnel have understood the contents of the operating instructions completely.

3.4 Dangers in case of inobservance of the safety instructions

The inobservance of the safety instructions may result in personal injuries, hazards to the environment and damages to the pump.

The inobservance of the safety instructions may have the following consequences:

- Failure of important functions of the pump
- Failure of prescribed methods for maintenance and upkeep
- Danger to persons by electrical, mechanical and chemical influences
- Danger to the environment due to leakage of hazardous media

3.5 Safety-conscious working

The safety instructions specified in this operating manual, the national regulations for accident prevention, the safety regulations for the pumped medium valid at the place of installation as well as internal working-, operating-, and safety instructions of the owner are to be observed.

3.6 Safety instructions for the operator

Leakage of dangerous conveying media and materials must be drained off so that a risk to persons and the environment can be excluded. The legal regulations are to be adhered to.
Dangers caused by electrical energy are to be prevented.

3.7 Safety instructions for maintenance, inspection and installation

The operator has to ensure that all maintenance, inspection and installation tasks are carried out by authorized and sufficiently qualified personnel, who have carefully read and understood the operating instructions.

Only those spare parts and materials are to be used that satisfy the requirements of the relevant operating conditions.
Loosen screws and connections only when the system is not under pressure.

3.8 Arbitrary modification and spare parts production

Modifications of or changements to the machine are only allowed after previous agreement of the manufacturer. Original spare parts and accessories that are authorized by the manufacturer are essential for safety reasons.

CAUTION!

Use of other parts may result in loss of guarantee for damages arising as a consequence thereof.

3.9 Improper use

The operating safety of the supplied multi-layer diaphgram pump is only guaranteed if the product is used as intended, according to the descriptions in Chapter 3.10 of these operating instructions.

3.10 Proper use

The **sera** – diaphragm pump is only to be deployed according to the intended purpose stated in the product description and the acceptance test certificate.

If the pump is to be used for other purposes, it is required to consult **sera** beforehand to settle whether the multi-layer diaphragm pump is suitable for the new usage!

The criteria for determining whether the multi-layer -diaphragm pump is appropriately used are:

- Characteristics of the medium conveyed (refer to the safety and product data sheet of the used medium – the safety data sheet is to be provided by the supplier / operator of the conveying medium).
- Stability of the materials which have contact with the medium conveyed
- Operating conditions at the place of installation
- Pressure and temperature of the conveying and cooling medium
- Voltage supply

3.11 Personal protection for service and maintenance

In order to avoid risks to health, the provisions of the German Ordinance on Hazardous Substances (GefStoffV) (§14 Safety Data Sheet) and relevant national safety regulations for the dosing medium must strictly be adhered to.

In case of accidents check whether the following substances are emitted:

- Leakage of fluids
- Leakage of fumes
- Noise emissions (sound level)

Emissions must be monitored by monitoring systems of the total installation.

CAUTION!

Use protective clothing, gloves, breathing mask and suitable goggles for face protection!

CAUTION!

Personal protective equipment must be provided by the equipment operator at all times!

3.12 Utilities

If not agreed otherwise in the contract conditions, the **sera** - multi-layer diaphragm pump will always be supplied with the necessary utilities.
(For type and quantitiy of utilities/lubricants, see Chapter 11)

4 Transportation and intermediate storage

4.1 General

Before shipment **sera** - products are tested for proper functioning and quality.

An undamaged packaging protects the device during subsequent storage and should only be opened when the multi-layer diaphragm pump will be installed.

CAUTION !

The packaging material must be disposed of appropriately!

4.2 Transport

Select a hoist which is adapted to the weight of the pump and attach it to the motor flange of the pump (see Fig. 02).

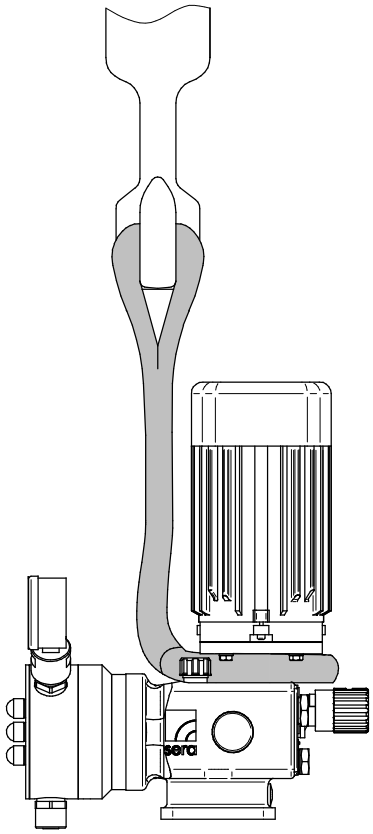

Fig. 02 Transport/Handling

4.3 Storage

An undamaged packaging protects the device during subsequent storage and should only be opened when the multi-layer diaphragm pump will be installed.

A proper storage will increase the service life of the pump.
Proper storage means avoidance of negative influences, such as heat, humidity, dust, chemicals etc.

The following storage conditions must be observed:

- Storage place: cool, dry, dust-free and slightly ventilated.
- Storage temperature between +2°C and + 40°C.
- Humidity not more than 50%.
- The maximum storage time for the standard system is 12 months.

If this value is exceeded, products made from metal should be sealed in foil and protected against condensation water using suitable desiccants.

Do not store solvents, fuels, lubricants, chemicals, acids, disinfectants and similar together with the product in the storage room.

5 Assembly groups of multi-layer diaphragm pump

The multi-layer diaphragm pump may be assembled of the following (main) components:

- Stroke mechanism with drive
- Stroke length adjustment
- Assembly pump
- Pump body
- Valves

Options:

- Stroke frequency transmitter
- Actuator
- Frequency converter

Not illustrated:

- Actuator for Ex-area
- pneumatical actuator
- EExeIIT4 – Driving motor

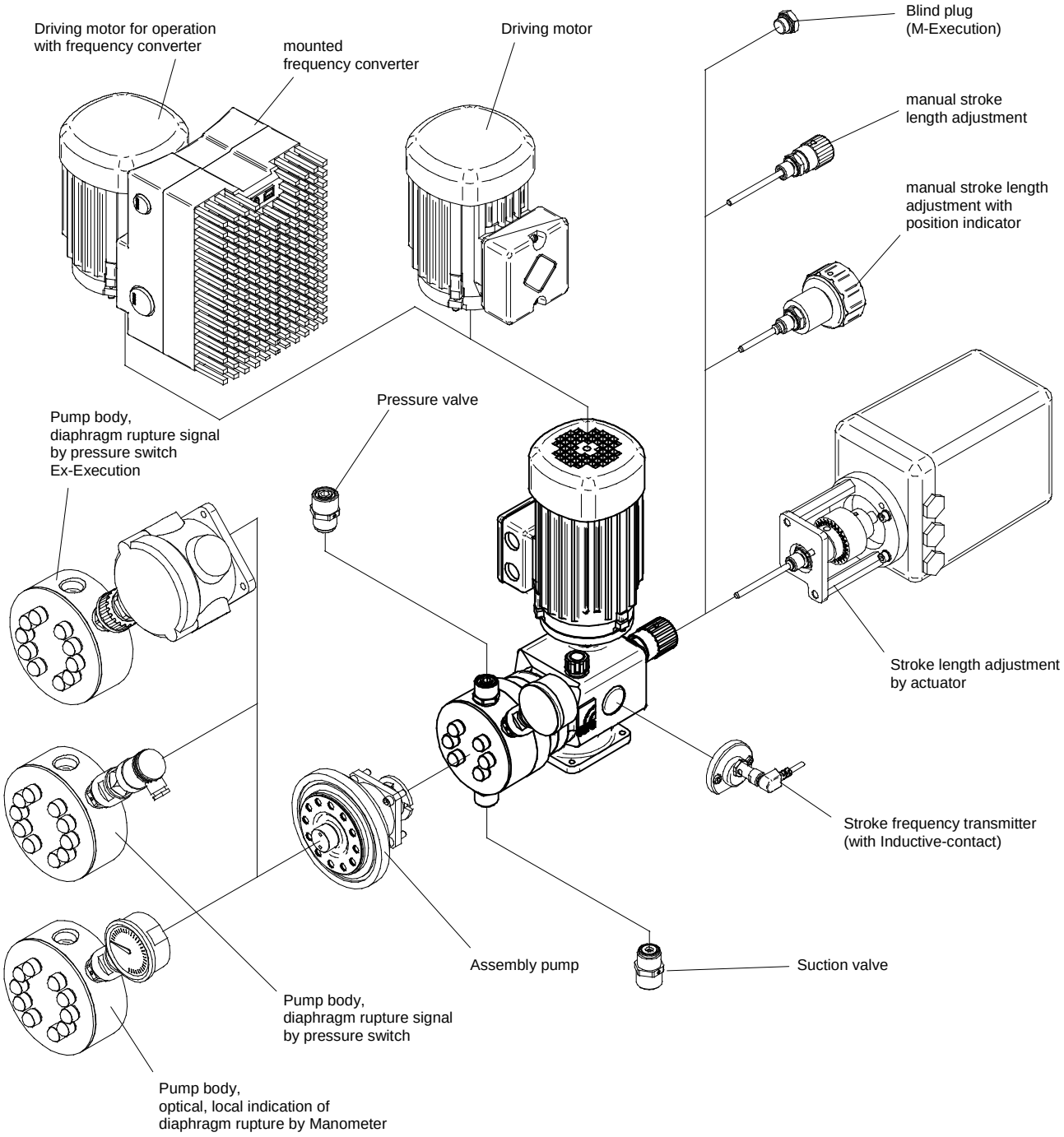

Fig. 03 Assembly - overview

6 Technical data

6.1 Dimensions

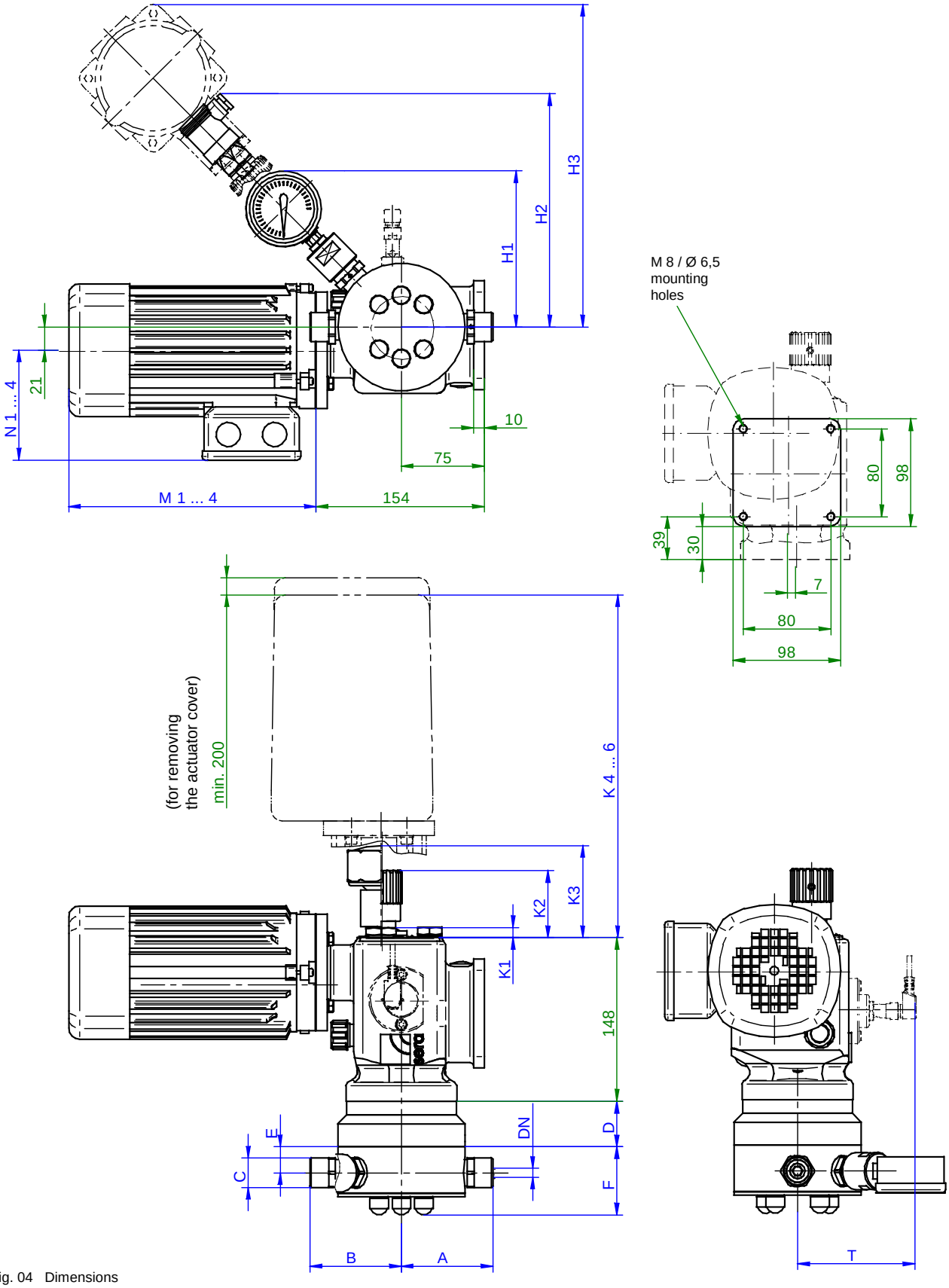

Fig. 04 Dimensions

Tab. 02
Dimensions

All dimensions in mm !

			Pump type									
			R409.2-11 ML	R409.2-17 ML	R409.2-30 ML	R409.2-45 ML	R409.2-72 ML	R409.2-110 ML	R409.2-150 ML		R409.2-220 ML	
Valves	A	Single valves PVC	---	---	93	93	97	97	---	124	---	124
		Single valves 1.4571/1.4581	---	---	---	---	---	---	127	---	127	---
		Single valves PP-FRP, PVDF-FRP	---	---	---	---	94	94	127	---	127	---
		Double valves PP-FRP, PVDF-FRP	83	83	90	90	---	---	---	---	---	---
		Double valves 1.4571/1.4581	83	83	91	91	95	95	---	---	---	---
		Chamber valves PVC, 1.4571	88	88	---	---	---	---	---	---	---	---
	B	Single valves PVC	---	---	100	100	104	104	---	143	---	143
		Single valves 1.4571/1.4581	---	---	---	---	---	---	127	---	127	---
		Single valves PP-FRP, PVDF-FRP	---	---	---	---	94	94	127	---	127	---
		Double valves PP-FRP, PVDF-FRP	83	83	90	90	---	---	---	---	---	---
		Double valves 1.4571/1.4581	---	---	91	91	95	95	---	---	---	---
		Chamber valves PVC, 1.4571	88	88	---	---	---	---	---	---	---	---
	C	Connection thread suction-/pressure valve	G ¾	G ¾	G ¾	G ¾	G ¾	G ¾	G1¼	G1	G1¼	G1
	DN	Nominal diameter	5	5	8	8	8	8	20	15	20	15
	D	Assembly pump	43	43	40	40	44	44	43		43	
Pump body (PD)	E	Centre – screw-in thread for valves (1.4571)	16	16	18	18	21	21	33		33	
		Centre – screw-in thread for valves (PP, PVC, PVDF)	24	24	24	24	27	27	33		33	
	F	Pump body, 1.4571 (without front plate)	49	49	51	51	54	54	80		80	
		Pump Body, PP, PVC, PVDF (with front plate)	62	62	65	65	65	65	83		83	
	H_1	Pumpbody with Manometer (1.4571)	134	134	138	138	141	141	155		155	
		Pump body with Manometer (PVC, PP, PVDF)	134	134	138	138	141	141	155		155	
	H_2	Pump body with pressure switch (1.4571)	139	139	144	144	146	146	161		161	
		Pump body with pressure switch (PVC, PP, PVDF)	139	139	144	144	146	146	161		161	
	H_3	PB with pressure switch EX-execution (1.4571)	211	211	216	216	221	221	234		234	
		PB with pressure switch EX-execution (PVC, PP, PVDF)	222	222	226	226	230	230	245		245	
Stroke length adjustment (SLA)	K_1	Blind flange for execution without stroke length adjustment	8	8	8	8	8	8	8		8	
	K_2	Manual stroke length adjustment (max.)	70	70	70	70	70	70	70		70	
	K_3	Manual stroke length adjustment with position indicator	110	110	110	110	110	110	110		110	
	K_4	Electrical actuator	240	240	240	240	240	240	240		240	
	K_5	Electrical actuator with PMR2	320	320	320	320	320	320	320		320	
	K_6	Electrical actuator Ex-execution	470	470	470	470	470	470	470		470	
Driving motor (BC 71)	M_1	Driving motor (Standard)	225	225	225	225	225	225	225		225	
	N_1		120	120	120	120	120	120	120		120	
	M_2	Driving motor for operation with Frequency converter (FU)	225	225	225	225	225	225	225		225	
	N_2		120	120	120	120	120	120	120		120	
	M_3	AC - Motor	175	175	175	175	175	175	175		175	
	N_3		100	100	100	100	100	100	100		100	
	M_4	EExeIIT4 - motor	200	200	200	200	200	200	200		200	
	N_4		100	100	100	100	100	100	100		100	
Option	T	Stroke frequency transmitter	110	110	110	110	110	110	110		110	
Stroke mechanism		Amongst others, dimensions for fastening the pump	See Fig. 04									

6.2 Technical data

6.2.1 Output data

Type	Pump data									
	Nominal capacity [2] adjustable by changing lift of strokes		Maximum permissible pressure at outlet of pump	Minimum- / maximum permissible pressure at inlet of pump	max. suction height [1]	Inlet- / outlet nominal size	Nominal stroke frequency		max. stroke length	Motor size (standard execution)
	Q_N l/h		p_2 max.	p_1 min. / max.	WC	DN	min $^{-1}$		h100	BG
	50 Hz	60 Hz	bar	bar	m	mm	50 Hz	60 Hz	mm	
..409.2 – 11 ML	0-11	0-13,2	10 [3] 20	-0,3/0	3	10	100	120	4	71
..409.2 – 17 ML	0-17	0-20	10 [3] 20	-0,3/0	3	10	150	180	4	71
..409.2 – 30 ML	0-30	0-36	10 [3] 16	-0,3/0	3	10	100	120	6	71
..409.2 – 45 ML	0-45	0-54	10 [3] 16	-0,3/0	3	10	150	180	6	71
..409.2 – 72 ML	0-72	0-86	10	-0,3/0	3	15	100	120	8	71
..409.2 – 110 ML	0-110	0-132	10	-0,3/0	3	15	150	180	8	71
..409.2 – 150 ML	0-150	0-180	4	-0,3/0	3	15	100	120	10	71
..409.2 – 220 ML	0-220	0-264	4	-0,3/0	3	15	150	180	10	71

Tab. 03 Output data

[1] Achievable suction height with media similar to water and filled suction line
[2] Linear dosing range between 20 and 100% stroke length
[3] Maximum pressure for pump bodies made of plastics

6.2.2 Motor data BG71

Motor type	Motor data								
	Power	Motor rotation speed		Mains frequency	Voltage range	Nominal current	Protection category	Heat class	ATEX version
	[kW]	[min^{-1}]		[Hz]	[Volt]	[A]	[IP]		
		50 Hz	60 Hz		50 Hz / 60 Hz	50 Hz / 60 Hz			
Standard-Motor	0,37	~1500	~1800	50/60	**PAY ATTENTION TO TYPE PLATE !** The data can be read off the type plate on the drive motor of the respective diaphragm pump!		55	F	---
Motor for operation with frequency converter	0,37	~1500	~1800	50/60			55	F	---
AC - Motor	0,37	~1500	---	50			55	F	---
EExeIIT4- Motor	0,25	~1500	---	50			55	F	II2G EExe IIT4
EExdeIIT4-Motor (pressure-proof)	0,25	~1500	---	50			55	F	II2G EExde IIT4

Tab. 04 Motordaten

7 Functional discription

7.1 General

sera - multi-layer diaphragm pumps are run-dry safe oscillating displacement pumps that are characterised by high tightness of the dosing head. The liquid is conveyed by a deformable multi-layer diaphragm.

Multi-layer diaphragm pumps consist of the following (main) components:

- Driving motor
- Stroke mechanism
- Stroke length adjustment
- Assembly pump
- Pump body
- Suction- and pressure valve

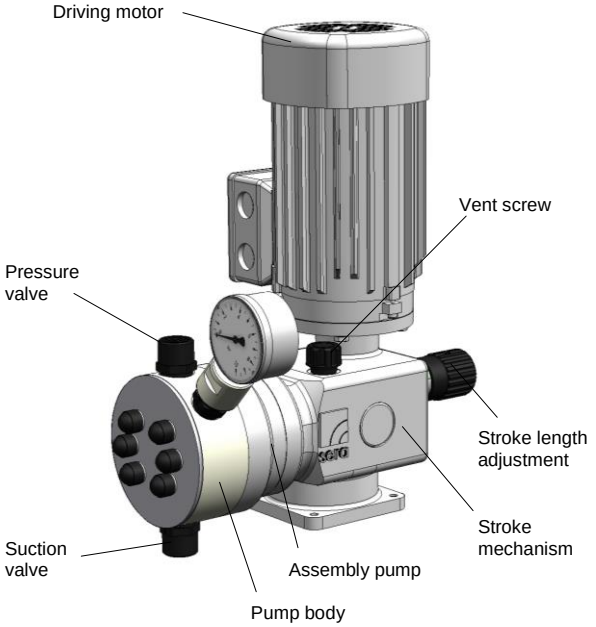

Fig. 05 Assembly groups

7.2 Assembly groups of the multi-layer diaphragm pumps 409.2

7.2.1 Stroke mechanism

Function:

Multi-layer diaphragm pumps of this type series use a rotary cam drive to transmit the rotation of the drive motor to the displacement body.
In case of the rotary cam drive, the eccentric provides the pressure stroke while the suction stroke is performed by a pressure spring (return spring).
The effective stroke length can be changed by means of an adjustable scale knob which prevents the connecting rod from following the rotary cam up to the rear dead centre during suction stroke (see stroke length adjustment).

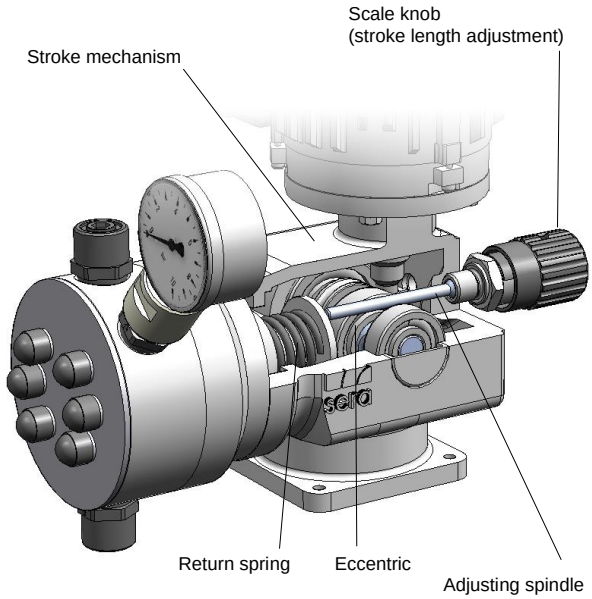

Fig. 06 Stroke mechanism

7.2.2 Stroke length adjustment

General

The delivery rate of the pump is regulated by changing the stroke length. The stroke length is infinitely variable between 0% and 100%.
A linear dosing behaviour is achieved with stroke length adjustments between 20% and 100%.

7.2.2.1 Manual stroke length adjustment (Standard)

The effective stroke length of the connecting rod is changed by turning the scale knob.
The stroke length can be adjusted both during operation and standstill (in unpressurized condition) of the pump.
The set stroke length can be read off a scale, e.g. 75% (see Fig. 07).
With the 20-steps adjustment on the scale knob, the stroke length can be set individually with a tolerance of 0.5%.

Turning counter-clockwise (see Fig. 07)	→	the effective stroke length increases, the delivery rate increases.
Turning clockwise	→	the effective stroke length decreases, the delivery rate decreases.

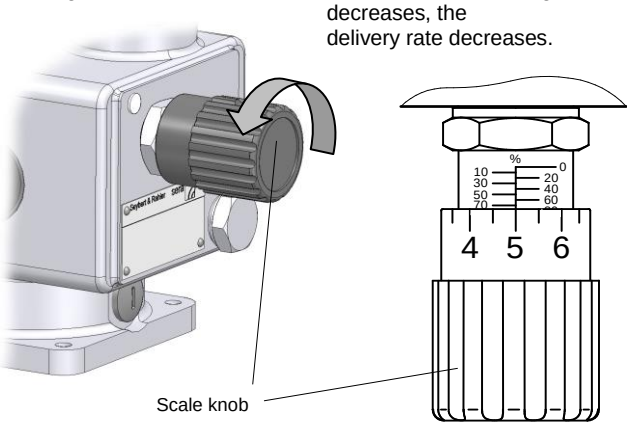

Fig. 07 Stroke length adjustment/Scale knob

7.2.2.2 Manual stroke length adjustment by a dial scale with indication of percent (option)

The stroke length is adjusted by turning the hand wheel. The stroke length can be adjusted both during operation and standstill (in unpressurized condition) of the pump.

Turning counter-clockwise (see Fig. 08)	→	the effective stroke length increases, the delivery rate increases.
Turning clockwise	→	the effective stroke length decreases, the delivery rate decreases.

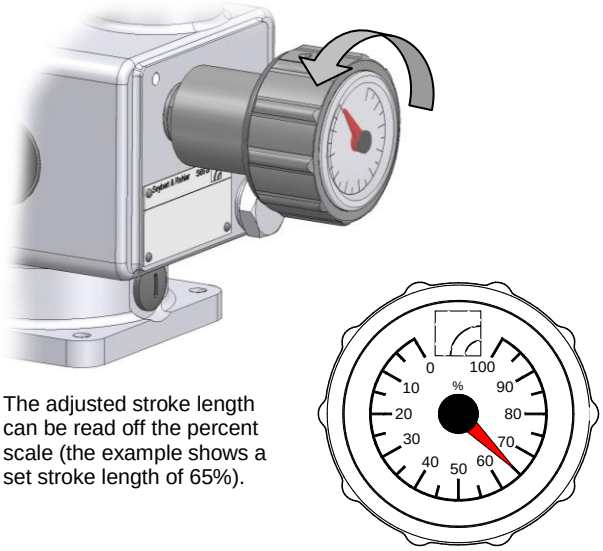

The adjusted stroke length can be read off the percent scale (the example shows a set stroke length of 65%).

Fig. 08 Stroke length adjustment with position indicator

In delivery state, the stroke length adjustment is factory set to 50%.

CAUTION!

The dial scale with indication of percent may become misadjusted during transport.
If the indicator does not match the 50% setting, then the percent scale must be re-adjusted during operation(!) of the pump!

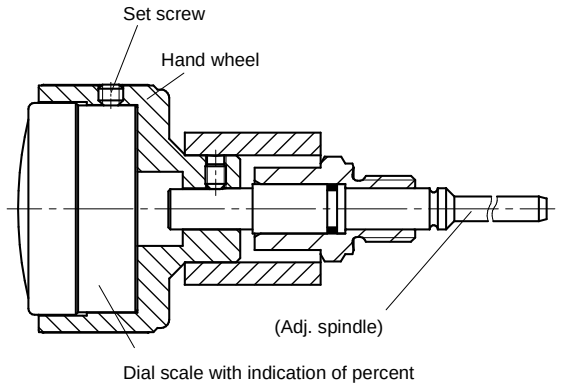

Fig. 09 Stroke length adjustment with position indicator

Adjusting the percent scale:

- switch the multi-layer diaphragm pump on
- loosen the set screw
- remove the percent scale from the hand wheel
- manually turn the percent scale to 0% setting
- use the hand wheel to set the stroke length to 0%. Turn hand wheel clockwise until there is no further stroke movement (push rod does no longer hit the adjusting spindle)
- insert percent scale again
- use the set screw to secure the percent scale to the hand wheel
- adjust desired stroke length

7.2.2.3 Automatic stroke length adjustment by an electrical actuator

The electrical actuator is directly mounted to the stroke mechanism of the dosing pump. A clutch transmits the rotary motion of the actuator driveshaft to the adjusting spindle. The axial displacement is compensated in the clutch.

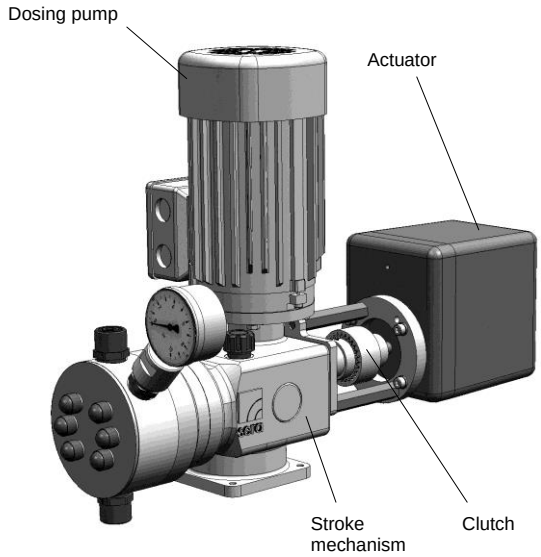

Abb. 10 Stroke length adjustment by actuator

In case of dosing pumps with electrical actuator, a manual adjustment of the stroke length on the pump is no longer possible.
(Exception: actuator with hand wheel)

The actuator is standardly equipped with two integrated limit switches and a position potentiometer for position feedback.
Both limit switches are factory set so that the drive will switch off at a stroke length of 0% and 100%, even if a control voltage is applied.
This guarantees that adjustments can only be made within the permissible range. The position potentiometer is driven by a safety clutch which prevents damage caused by incorrectly adjusted limit switches.

Activation is performed by appropriate control units (see **sera** - accessories)

The set stroke length can be read off on the pump (percent scale).
Information about the electrical connection is given inside the cover of the actuator.

CAUTION !

The adjustment is only possible when the pump is running.

7.2.2.4 Automatic stroke length adjustment by an electrical actuator with integrated positioner (PMR2)

same as Chapter 7.2.2.3, additionally:

- PMR2 positioner

This PMR2 positioner integrated in the actuator enables an actuator setting from 0…100% that is proportional to the connected input signal.

As an option, the actuator can also be provided with a collective interference signal.

Information about the electrical connection is given inside the cover of the actuator.

7.2.2.5 Automatic stroke length adjustment by an electrical actuator (Ex-execution)

Pay attention to the documents attached to the actuator.

7.2.2.6 Automatic stroke length adjustment by a pneumatic actuator

Pay attention to the documents attached to the actuator.

7.2.3 Assembly pump

General

Function

The diaphragm consists of three layers and is linked with the connecting rod. Only the front layer, the so-called working diaphragm, comes into direct contact with the dosing medium. The middle layer functions as a signalling diaphragm. In case of a rupture of the working diaphragm, the medium is fed to the diaphragm rupture signalling in a controlled manner. The diaphragm rupture can be analysed either electrically or visually (local). The third membrane functions as protection diaphragm and ensures that no dosing medium will leak out, even not if the working diaphragm has ruptured.
A diaphragm rupture is indicated either by a manometer (visual) or, optionally, by a pressure switch (electrical).

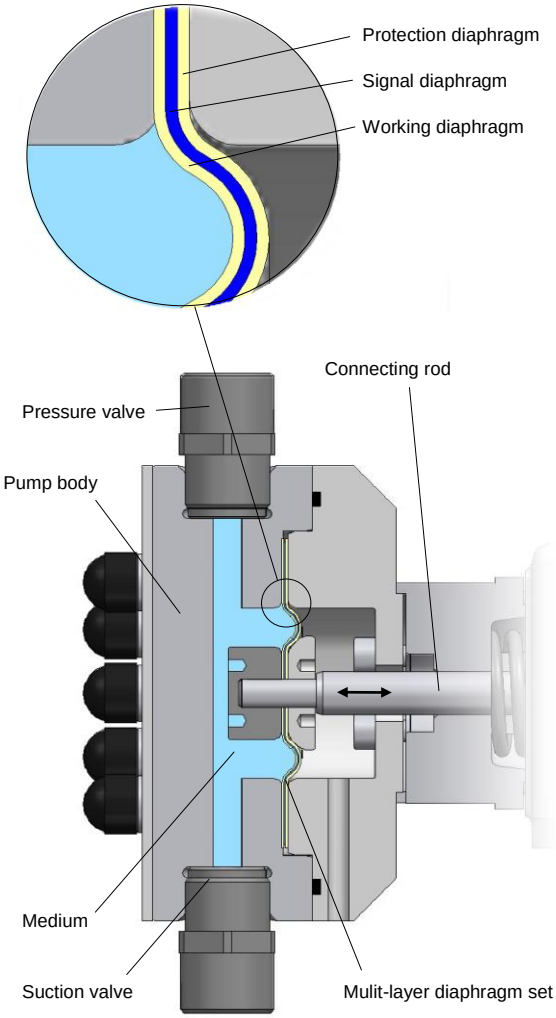

Abb. 11 Function principle of multi-layer diaphragm pump

7.2.4 Pump body

Depending on the applied backpressure, movements of the plastic pump body in elastic materials are possible.
This does not affect the pumps's durability or operating safety.

7.2.5 Suction-/Pressure valve

The pump valves are ball valves that only work properly in a vertical position. The condition of the valves has a deciding effect on the operating capability of the pump.
Valves must be exchanged as complete units.

When replacing the valves it is important to check the flow direction (see Fig. 12).

CAUTION!

Pressure valve above; Suction valve below !

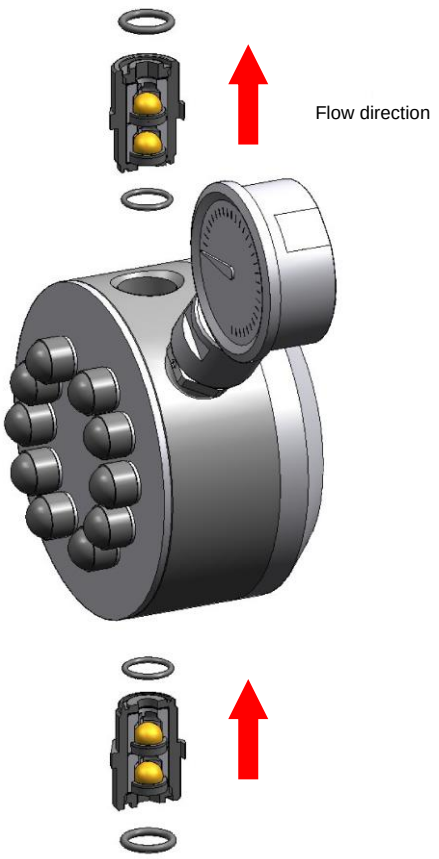

Fig. 12 Double valves, FRP-Execution

7.2.6 Stroke frequency transmitter (optional)

sera – dosing pumps are oscillating displacement pumps with an exactly defined stroke volume per each pump stroke.

If these dosing pumps should be used for automatic filling processes or charge dosing, then the single pump strokes must be determined and converted into electrical signals.
For this purpose, a stroke frequency transmitter (inductive contactor) is added to the pump and reports each single pump stroke to the evaluation unit (e.g. preselection counter, SPS-control unit, etc.)

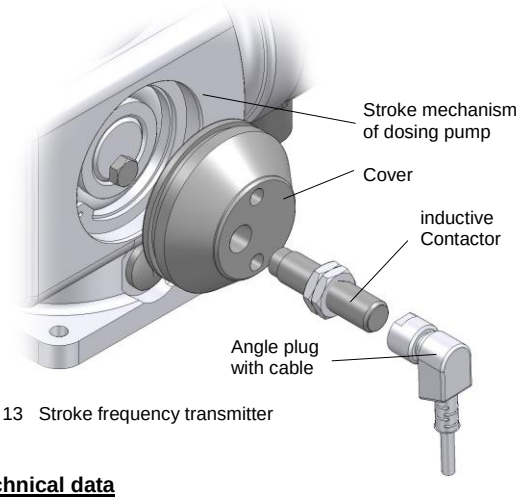

Fig. 13 Stroke frequency transmitter

Technical data

Nominal voltage:	10 - 60 V DC
Constant current:	< 200 mA
Current-limited	
Connection design:	Connector with 2m cable
LED (green):	Indication for supply voltage
LED (yellow):	Indication for switching status

Circuit diagram

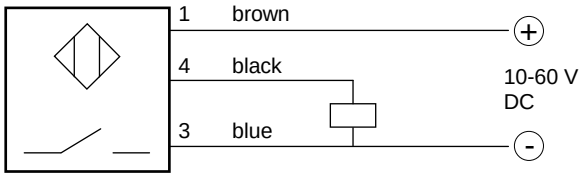

CAUTION!

When switching inductive loads (protectors, relays, etc.), surge protectors (varistors) must be fitted because of the high self-induction voltage.

CAUTION!

In the case of use in explosion-hazardous areas, a NAMUR design stroke frequency emitter is to be fitted (II2G EExia IICT6, in compliance with ATEX95).

7.2.7 Diaphragm rupture monitoring

sera - multi-layer diaphragm pumps are equipped with a diaphragm rupture monitoring.

CAUTION!

For more detailed information about the indicators of the diaphragm rupture monitoring, please see Chapter 17!

7.2.7.1 Visual diaphragm rupture monitoring by manometer (only local signalling)

In case of a rupture of the working diaphragm, the medium under pressure flows through a bore in the pump body to the signalling manometer and causes a pointer deflection.

- Switch off the pump immediately
- Replace the diaphragm

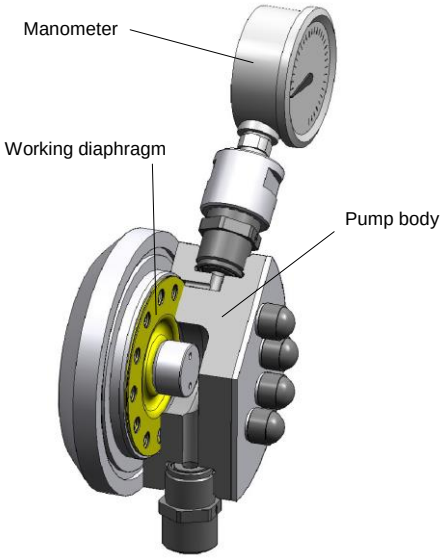

Fig.14 Diaphragm rupture monitoring by manometer

CAUTION!

If the pump is operated with a backpressure that is only slightly higher than the permissible minimum pressure of p_2=1bar, then the deflection of the pointer on the manometer will also be slight.

During normal operation with intact membrane, the manometer shows 0bar.

7.2.7.2 Diaphragm rupture monitoring by Pressure switch

In case of a rupture of the working diaphragm, a pressure is generated on the pressure switch. The present signal must be evaluated and further processed in such a way that the pump is switched off instantly.

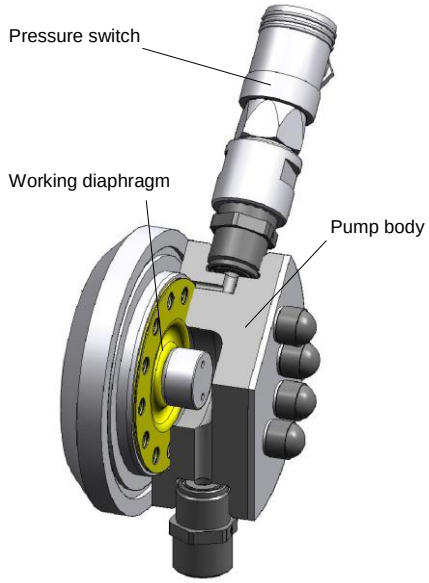

Fig. 15 Diaphragm rupture monitoring by pressure switch

7.2.7.3 Diaphragm rupture monitoring by Pressure switch (Ex-Area)

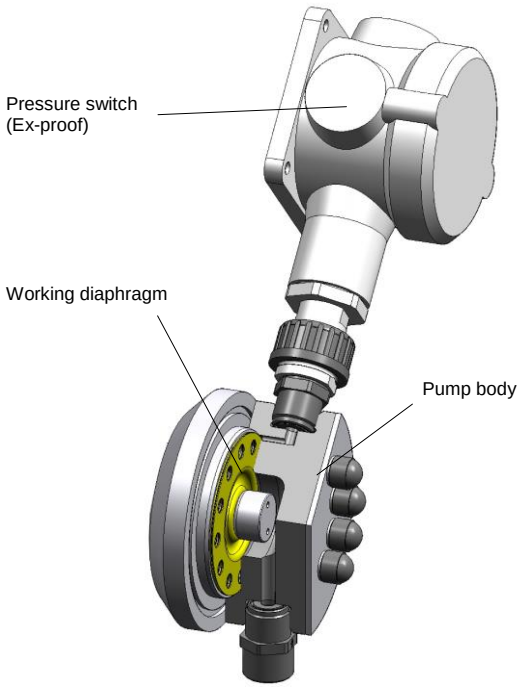

Fig.16 Diaphragm rupture monitoring by pressure switch (Ex)

CAUTION!

The pressure switch is factory set to a switching pressure of ≤ 1bar. For this reason and in order to guarantee a correct dosing function, the pump should always be operated with a pressure of ≥ 1bar!

7.3 Driving motor

sera - multi-layer diaphragm pumps are driven either by a three-phase motor or an AC motor.

7.3.1 Motor connection (standard)

In case of a three-phase motor

The motor connection depends on the voltage indication on the type plate and the applied supply voltage.

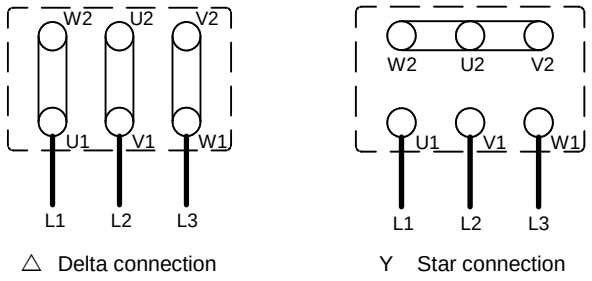

Fig. 17 Circuit diagram(s) three-phase motor

Example:

Indication on the type plate:	230/400 V
Three-phase power system on site:	400 V
Correct motor connection:	Y Star connection

In case of an AC motor

The AC motor has a main and an auxiliary winding. The running capacitor is switched in series to the auxiliary phase.

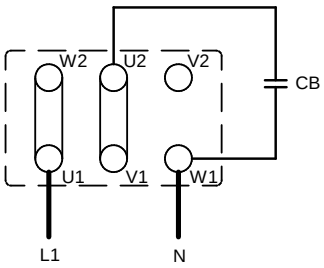

Fig. 18 Circuit diagram AC-motor

7.3.2 Direction of rotation

The direction of rotation of the drive motor is arbitrary.

7.3.3 Terminal box

Before closing the terminal box, please check that:

- all terminal connections are tightly fitted
- the interior is clean and free of foreign bodies
- unused cable entries are closed and screw plugs are tightened
- the sealing is correctly inserted in the cover of the terminal box; check proper condition of all sealing surfaces so that the demands of the protection category are fulfilled.

7.3.4 Start-up

Preconditions:

Make sure that voltage and frequency correspond with the indications on the type plate of the motor. Permissible voltage tolerance (DIN VDE 0530)

for rated voltage	+ 10%
for rated voltage range	+/- 5%

The connecting cable must be dimensioned according to the motor characteristics.
Secure connecting cable with a strain relief.

The nominal motor power refers to an ambient temperature of 40°C and an installation site below 1000m above sea level. Motor output will be reduced if these values are exceeded (see VDE 0530).

Adapted for “moderate” groupe of climates according to IEC 721-2-1.

CAUTION !

The drive motor will heat by operation of the pump.
Do not touch the motor during operation!

7.3.5 Motor protection

Provide for adequate motor protective equipment in order to protect the motor from overload (e.g. motor protection switch with thermal overcurrent release).
Connect the ground wire to the marked earth screw in accordance with VDE 0100.

CAUTION!

Fuses do not protect the motor.

7.3.6 Maintenance of the drive motor

The electric motor should always be kept clean so that neither dust, dirt, oil nor other contaminates may affect the correct operation.

In addition, we recommend to ensure that:

- the motor does not produce strong vibrations
- suction and blowing openings for the supply of cooling air are not closed or restricted (may lead to unnecessary high temperatures in the windings).

The ball bearings inserted in the motor are lubricated for life.

7.3.7 Restart

Restart the system as described in Chapter 7.3.4 after maintenance work of after longer periods of standstill.

8 Installation

CAUTION!

In case of operation in explosion-hazardous areas, the instructions in Chapter 9 must also be followed!

8.1 Installation instructions

- The standard model of the pump is only approved for installation in dry rooms in a non-aggressive atmosphere, at temperatures between +2°C and +40°C and at permitted humidity until approx. 90%, altitude 1000 m above sea level. (For operation in explosion-harzardous areas, see Chapter 9).
- For dimensions of the pump connections and fixing holes, see Fig. 04, Table 02.
- Install the pump in such a way that there is no vibration and no tension and that it is aligned precisely.
- Install the pump at the optimum possible operating height. Mount the pump in such a way that the valves are vertical.
- Ensure that there is sufficient space around the pump body and the suction and pressure valve so that these parts may be easily dismantled, if required.
- The stroke length adjustment, indicator scale and visual diaphragm rupture signalling must be easily accessible and readable.
- Design the nominal diameters of the downstream pipes and of the connections built into the system to be the same size or larger than the inlet / outlet nominal widths of the pump valves.
- To check the pressure ratios in the pipe system, we recommend to provide for connections for pressure gauges (e.g. manometers) near the suction and pressure attachments.
- Provide evacuation fittings
- Prior to connecting the pipes, remove the plastic caps on the suction and pressure attachments of the pump.
- Check that the fixing screws for the pump body are tightly fitted and, if necessary, retighten.

Torque for tightening the fixing screws	
Pump body **without** mounting plate	15 NM
Pump body **with** mounting plate	15 NM

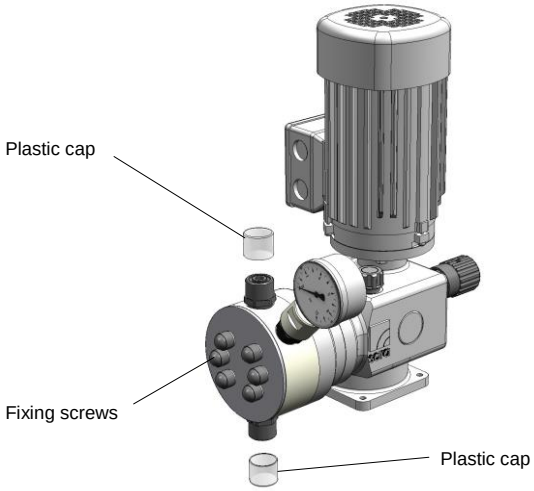

Fig. 19 Multi-layer diaphragm pump with plastic caps

- For models with a built-on actuator, ensure sufficient space for removal of the cover (see Chapter 6.1 “Dimensions“)
- Connect pipes to the pump in such a way that there are no forces acting on the pump, such as e.g. misalignment, weight or stress of the pipe.
- Keep the suction lines as short as possible.
- Use pressure- and medium-resistant hoses / pipes.
- All pipes and containers connected to the pump must comply with the regulations and must be cleaned, tension-free and intact.

CAUTION!

Where toxic, crystal-forming or corrosive liquids are being delivered, the pipe system must have equipment to enable it to be emptied, cleaned and, if necessary, rinsed with a suitable medium.

CAUTION!

In the case of operation on the 60Hz network it is essential to consider the possible higher stroke frequency when designing the pipe geometry.

CAUTION!

The multi-layer diaphragm pump must be installed in such a way that no damage can be caused if the medium leaks out.

In order to avoid cavitation, overloading and excessive delivery, the following points should be noted:

- avoid high suction heights
- keep pipes as short as possible
- choose sufficiently large nominal diameters
- avoid unnecessary choke points
- install a pulsation damper
- install a pressure relief
- install a pressure keeping valve, if necessary
- in the case of degassing media, provide for a supply

CAUTION!

The operator must take suitable precautions on the supply side (collecting tray, diaphragm rupture alarm) to ensure that the container does not run dry in the event of a diaphragm rupture.

8.1.1 Provide for an overpressure protection

if the permissible pressure in the pump head may be exceeded, e.g. when a shut-off valve is closed or if the line is blocked:

- install the overflow valve

When using an external relief valve the following is valid for the feed back pipe:

- lead the overflow line with descending gradient in the storage tank which is under atmospheric pressure or lead it in an open drain gutter (see Fig. 20).

- or connect the overflow line directly to the pump suction line, but only if there is no check valve inside the suction line (e.g. foot valve of a suction lance) (see Fig. 21).

CAUTION!

Shut-off valves must <u>not</u> be closed when the pump is operating!

CAUTION!

An overpressure protection (e.g. an overflow valve) should always be installed if the permissible operating pressure may be exceeded.

CAUTION!

In the case that the pump is not equipped with an overpressure protection, it may get damaged if the permissible operating pressure is exceeded.

CAUTION !

The pumped medium may spout out if the pump is damaged.

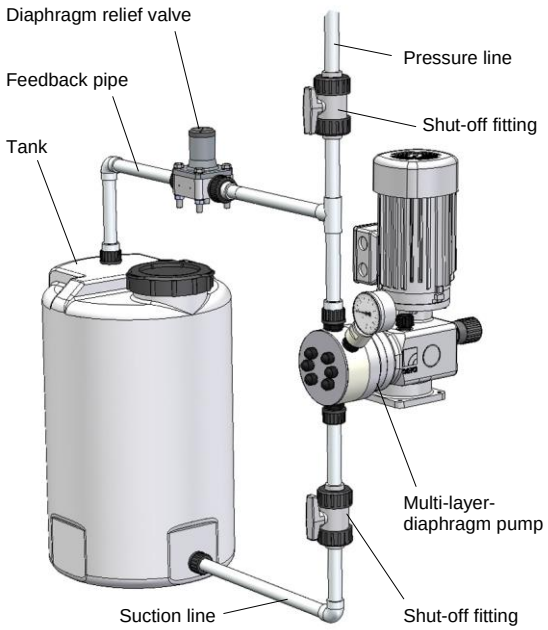

Fig. 20 Installation with diaphragm relief valve (into tank)

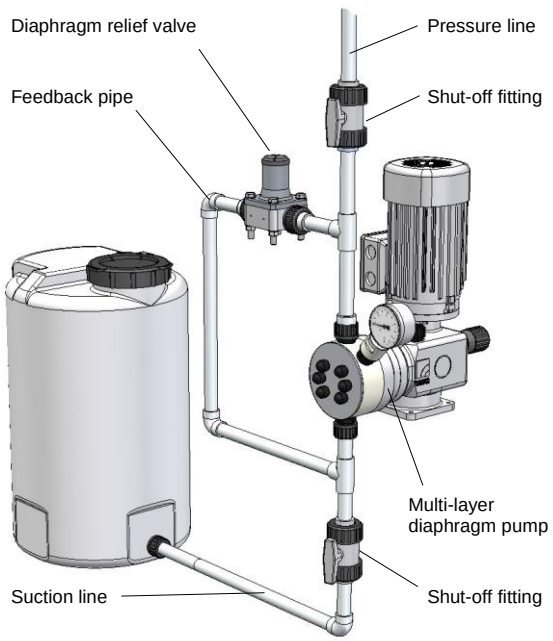

Fig. 21 Installation with diaphragm relief valve (into suction line)

8.1.2 How to prevent a backflow of the dosing medium

When the dosing line is linked with a main line:

- install an injection fitting (dosing valve).

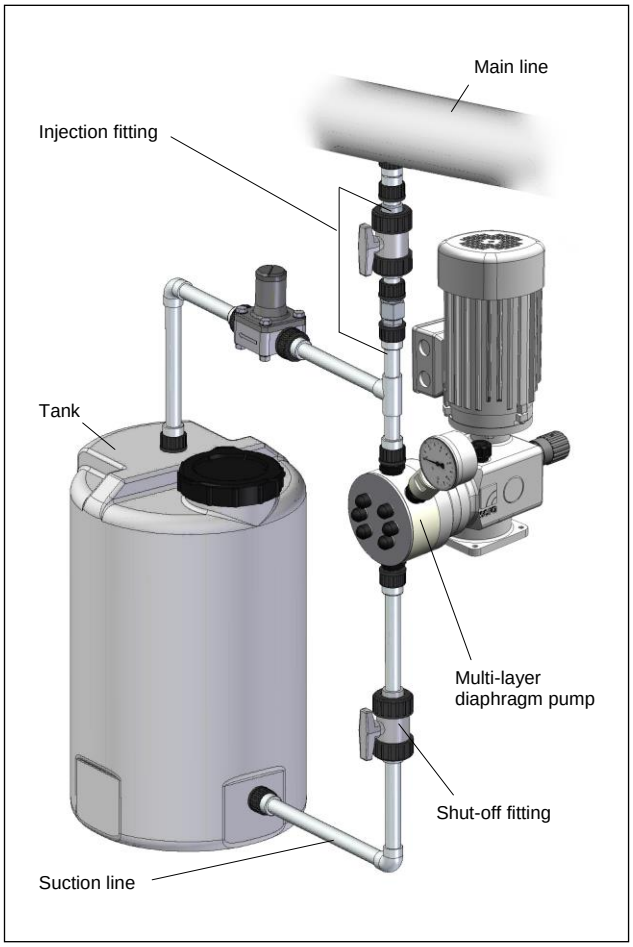

Fig. 22 Installation of injection fitting

CAUTION!

There will be an unintentional mixture in the dosing line if a possible backflow from the main line is not eliminated.

CAUTION!

Pay attention to/avoid chemical reactions arising from a backflow of the dosing medium.

8.1.3 How to eliminate undesired siphoning

When dosing into a main line with negative pressure:

- install a pressure keeping valve into the dosing line.

CAUTION!

When installing a pressure keeping valve, make sure that an uncontrolled dosing is avoided (by a positive pressure difference (≥ 1bar) between pressure and suction side).

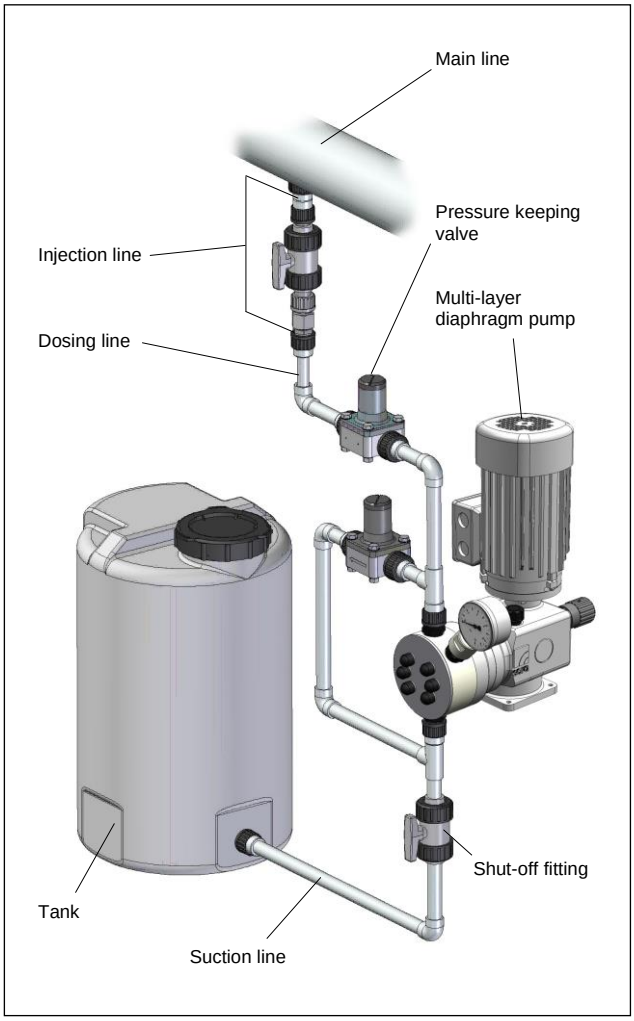

Fig. 23 Installation of pressure keeping valve

8.1.4 How to ensure an airless suction

If, due to a falling fluid level in the tank, air may be drawn in and delivered to a pressurised line or against a pressure keeping valve:

- install a ventilation valve into the pressure line.

CAUTION!

The delivery may get interrupted if air remains in the suction line!

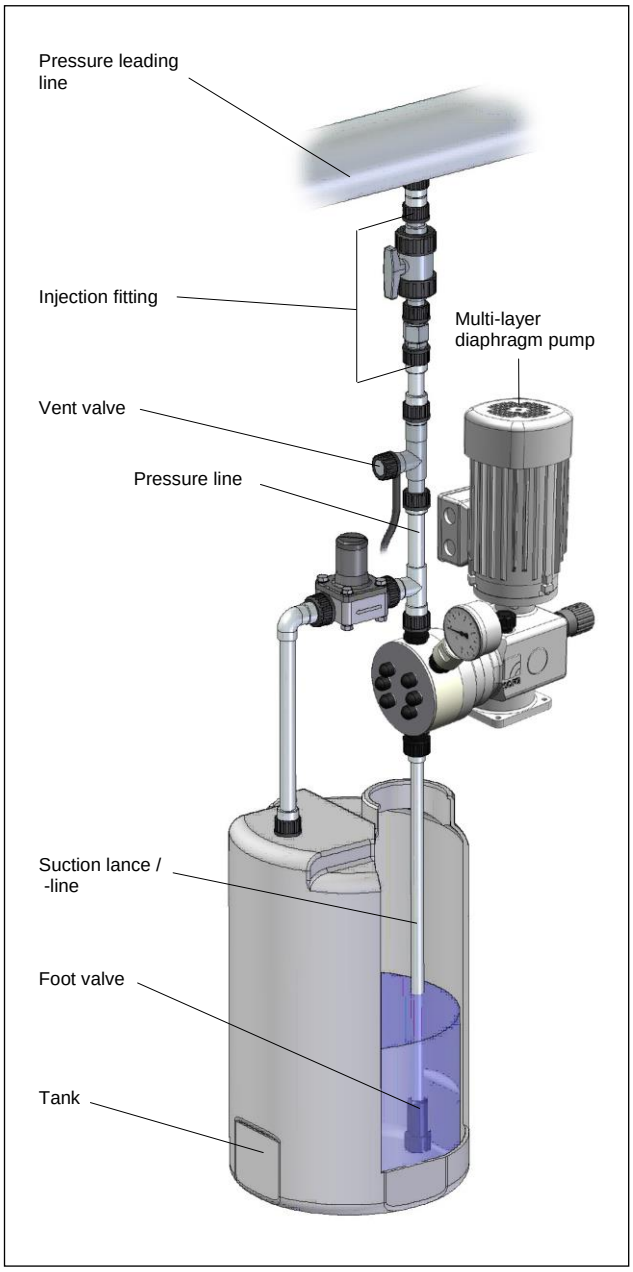

Fig. 24 Installation of ventilation valve

8.1.5 Installing the empty-tank alarm

so that the tank is refilled before air is drawn in.

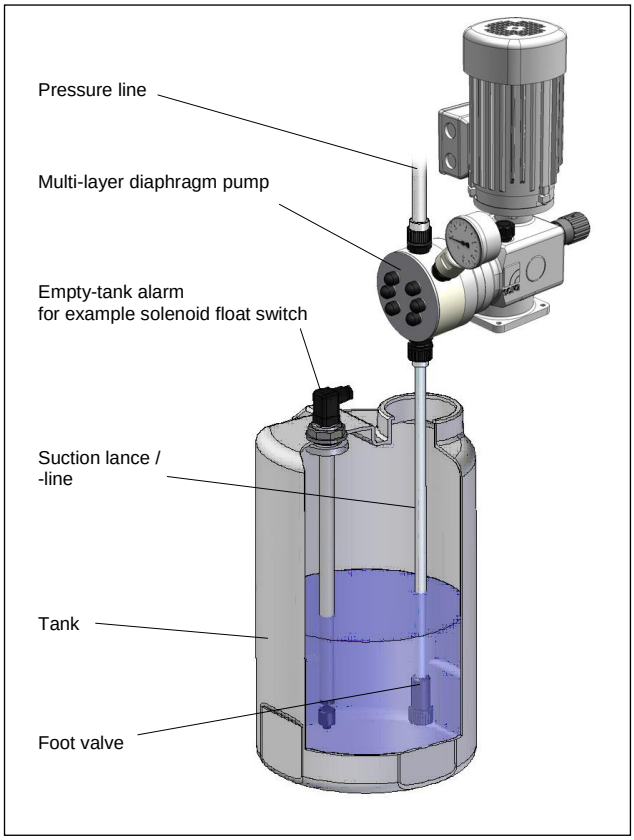

Fig. 25 Installation empty-tank-alarm

CAUTION!

The delivery may get interrupted if air remains in the suction line!

8.1.6 How to avoid an emptying of the suction line

- Install a foot valve at the end of the suction line if the pump is installed at a higher level than the maximum fluid level in the tank.

Based on calculations, the dimension '**H**' may not exceed the number that is equal to the specified maximum suction height of the pump divided by the density of the dosing medium and under consideration of mass acceleration and viscosity of the medium.

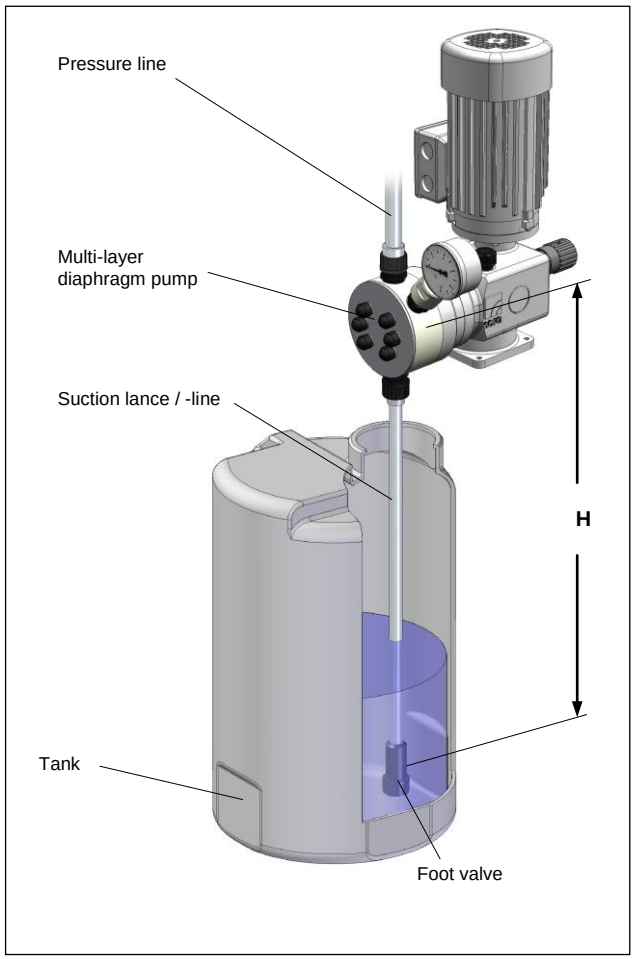

Fig. 26 How to avoid an emptying of the suction line

8.1.7 Line strainer

- Connect the suction line slightly above the bottom of the tank and install a line strainer (0.1 – 0.5mm aperture size – depending on nominal width of the valve).

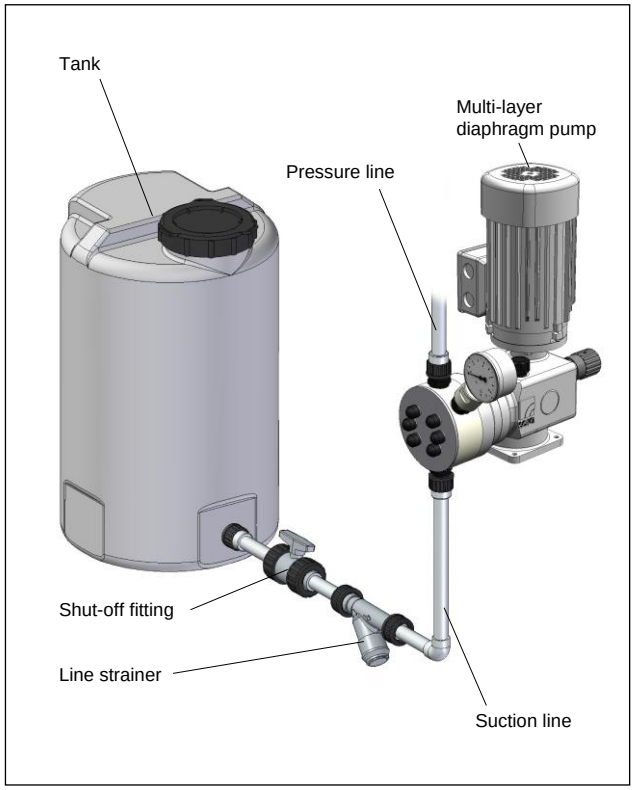

Fig. 27 Installation of a line strainer

CAUTION!

Pump and system may malfunction if contaminates are not collected.

8.1.8 Suction via a siphon pipe

For use with high tanks without connection on the bottom of the tank:

- install the siphon vessel
- pay attention to acceleration forces which may be generated in a long suction line.

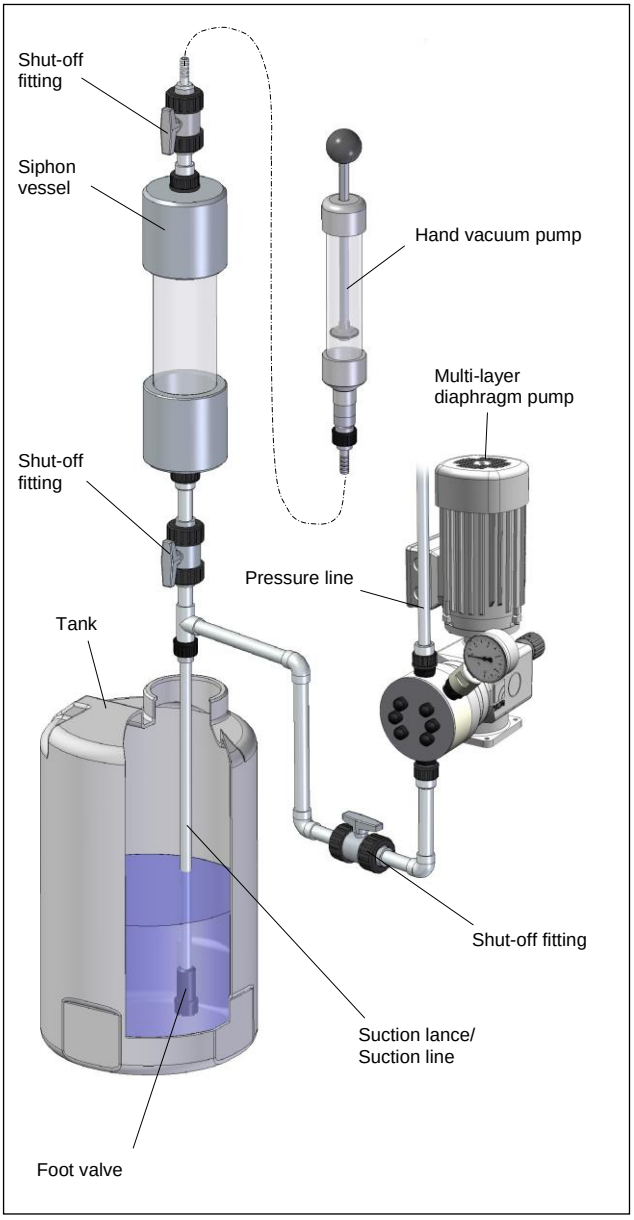

Fig. 28 Installation of siphon vessel (**sera** -Fitting)

8.1.9 In case of slightly degassing dosing media

- Install the pump so that it can be operated with afflux

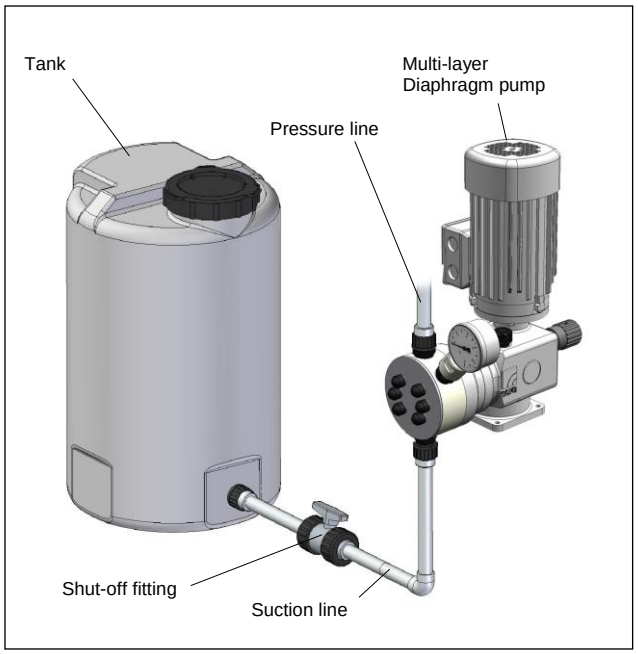

Fig. 29 Installation under afflux

8.1.10 Damping of the pulsation

By installing pulsation dampers if:

a pulsation-poor dosing flow is desired for procedural reasons;

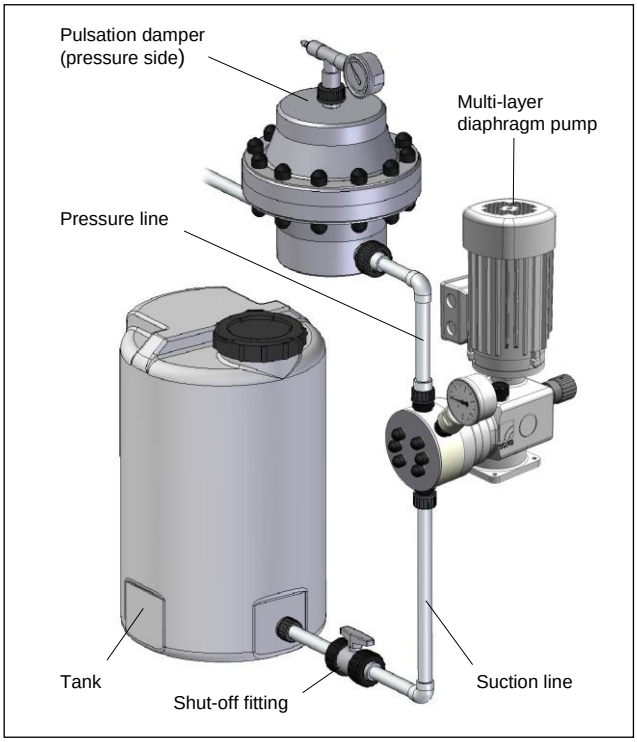

Fig.. 30 Installation of pulsation damper (I)

Acceleration forces which arise due to the pipe geometry must be reduced.

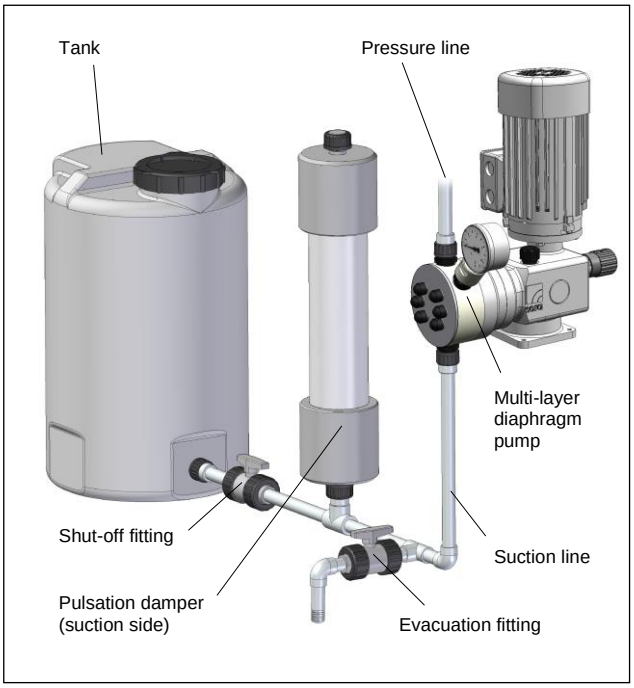

Fig.. 31 Installation of pulsation damper (II)

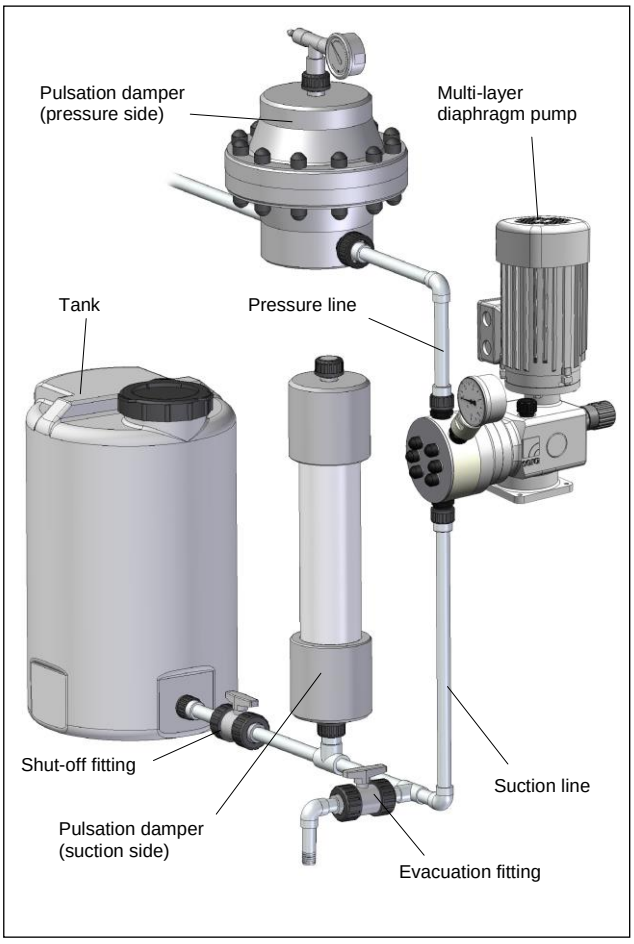

Fig. 32 Installation of pulsation damper (III)

CAUTION!

Undampened acceleration forces can cause the following problems/damage:

Fluctuations in the delivery rate
Dosing errors
Pressure thrusts
Valve wobbles
Increased wear on the suction and pressure side of the pump;

Mechanical breakdown of the pump
Leakages and valve wobbles as a result of the maximum pressure on the pressure side of the pump being exceeded.

Installation of suction and/or pressure pulsation dampers near the pump head.

If both pulsation damper and pressure keeping valve should be integrated install the pressure keeping valve between pump and pulsation damper.

Fig. 33 Installation of pulsation damper and pressure keeping valve

9 Operation in explosion-hazardous areas

9.1 General

CAUTION!

The prerequisite for the use in explosion-hazardous areas is an appropriate design of the pump.

The product supplied by **sera** meets the requirements of directive 94/9/EC. This guarantees a safe operation in explosion-hazardous areas.

CAUTION!

It is the operator's task to define the field of application and to check whether the pump is suited for this application. He/she must clearly define the zone, the device category, the explosion group and the temperature class.

9.2 Identification

The pump bears a label stating the zone/device category/ explosion group/temperature class in compliance with directive 94/9/EC.

- Ex II2G c IIBT4 or
- EX II2G c IICT4 respectively

(observe any special data that are contained in the order confirmation.)

9.3 Installation

9.3.1 General

Please see the order confirmation or product description for the operating conditions provided for the pump in potentially explosive area. The indicated limit values should not be fallen below or exceeded.

Installation regulations given in the operating instructions must be adhered to.

9.3.2 Working in explosion-hazardous areas

CAUTION!

Use only suitable tools for performing assembly and maintenance work on machines or plants in explosion-hazardous areas.
Directive 99/92/EC must be observed.

9.4 Potential equalisation

After fixation, make sure that the pump is properly connected to the potential equalisation system on site.

9.5 Start-up

After installation, the pump must immediately be used for the suction of fluids, i.e. the pump must immediately be started after the tank has been installed and filled.

9.6 Operation

9.6.1 General

The intended operating conditions in explosion-hazardous areas can be seen from the Inspection Certificate and the Declaration of Conformity in compliance with directive 94/9/EC. The indicated limit values should not be fallen below or exceeded.

Details about zone, device category, explosion group and temperature class can be seen from the Declaration of Conformity.

9.6.2 Degassing of the dosing medium

Never let the pump run dry. Check the liquid level in the tank during operation of the pump. Make sure that the pump is switched off if the liquid level in the tank falls below the minimum level required (explosive atmosphere may be carried over).

Vapour bubbles from the dosing medium are harmless as they have no explosive potential.

CAUTION!

The formation of an explosive mixture of gases must be prevented.

9.6.3 Temperature indications

permissible ambient temperature

$0°C \leq Ta \leq +40°C$

9.7 Maintenance

The maintenance instructions listed in Chapter 10 are generally applicable.

Exception:

CAUTION!

The oil level in the stroke drive of the pump must be checked once a week!

10 Maintenance

CAUTION!

Before starting maintenance work, make sure that all necessary wearing parts, spare parts and utitilies are in stock.
Deposit the parts in a safe place so that they will not get damaged.

CAUTION!

All wearing parts must be checked for proper condition in regular intervals and be replaced, if necessary.

The following should be checked in regular intervals:

- the piping is tightly fitted
- pressure and suction valve are tightly fitted
- the electrical connections are in proper condition
- the screws for fastening the pump body are tightly fitted (check this at least every three months).
  For the tightening torques of the fixing screws, please see Chapter 8.1 “Installation”.

Repairs on the stroke drive may only be performed by **sera**.

10.1 Wearing parts

Depending on their use and period of use, wearing parts must be replaced at regular intervals in order to ensure a safe operation of the multi-layer diaphragm pump.

We recommend to replace multi-layer diaphragms after 3000 operating hours or at least once a year.

In case of a premature diaphragm rupture caused by difficult operating conditions, switch off the multi-layer diaphragm pump and replace the multi-layer diaphragm (see Chapter 10.4).

As an option, the multi-layer diaphragm pump can be equipped with a diaphragm rupture monitoring by manometer or pressure switch (see Chapter 7.2.7)

The following parts are considered as wearing parts of the multi-layer diaphragm pump:

- multi-layer diaphragm
- suction valve
- pressure valve

10.2 Spare parts

The following parts are considered as spare parts of the multi-layer diaphragm pump:

- pump body
- manometer
- pressure switch

10.3 Spare- and wearing parts

...409.2 – 11 ML
...409.2 – 17 ML
...409.2 – 30 ML
...409.2 – 45 ML
...409.2 – 72 ML
...409.2 – 110 ML
...409.2 – 150 ML
...409.2 – 220 ML

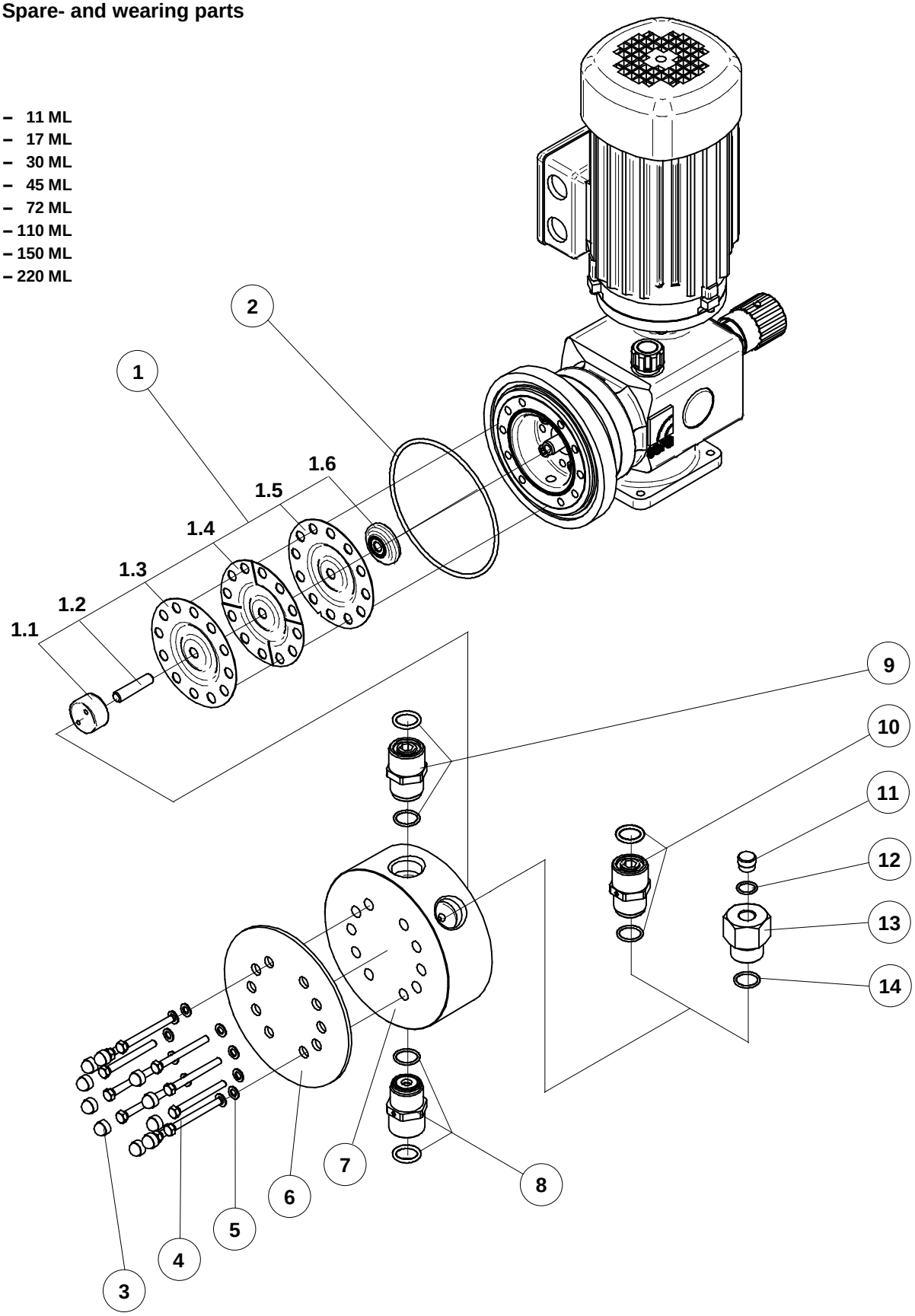

Fig. 34 Spare- and wearing parts

Overview of the spare and wearing part kits

Diaphragm rupture monitoring by manometer	Diaphragm rupture monitoring by pressure switch	Diaphragm rupture monitoring by pressure switch (Ex-Execution)
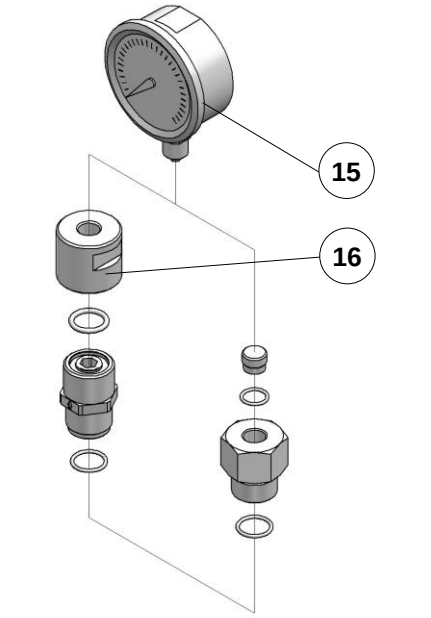	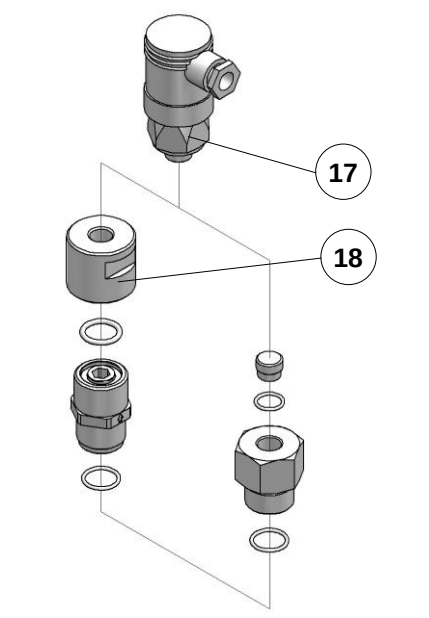	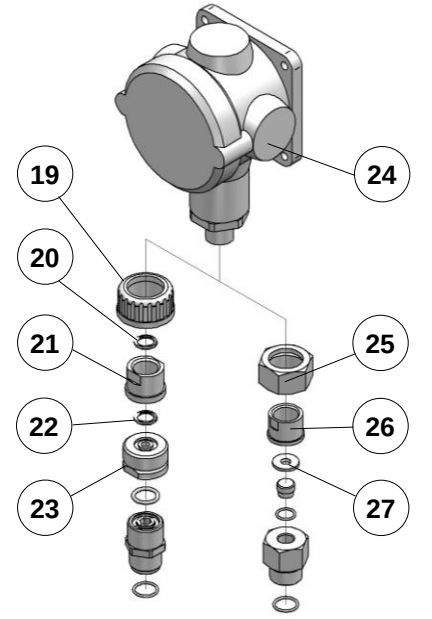

Fig. 35 spare- and wearing parts

Pump body-Set (plastic)	
Pos.	*Designation*
3	Protection cap(s)
4	Hexagon head cap screw(s)
5	Disk(s)
6	Front plate
7	Pump body
10	Pressure valve (check valve)
16/18	Transition piece
	additionally with ex-design
19	Screwed cap
20	O-ring
21	Insert socket
22	O-ring
23	Transition piece

Pump body-Set (stainless steel)	
Pos.	*Designation*
3	Protection cap(s)
4	Hexagon head cap screw(s)
5	Disk(s)
7	Front plate
11	Check valve
12	O-ring
13	Joint
14	O-ring
	additionally with ex-design
25	Screwed cap
26	Insert socket
27	Sealing washer

Suction valve (Set)	
Pos.	*Designation*
8	Suction valve (incl. O-rings)

Pressure valve (Set)	
Pos.	*Designation*
9	Pressure valve (incl. O-rings)

Diaphragm set	
Pos.	*Designation*
1	Multi-layer diaphragm package
(1.1)	Pressure plate (front, medium contacted)
(1.2)	Set screw
(1.3)	Working diaphragm
(1.4)	Signal diaphragm
(1.5)	Protection diaphragm
(1.6)	Pressure plate (behind)

Manometer	
Pos.	*Designation*
15	Manometer

Pressure switch	
Pos.	*Designation*
17	Pressure switch

Pressure switch	
Pos.	*Designation*
19	Pressure switch (Ex-Execution)

10.4 Replacing the diaphragm

10.4.1 General

In order to ensure a correct function of the multi-layer diaphragm pump and to fulfill the required safety and protective provisions – especially in explosion-hazardous areas – it is absolutely necessary to check and replace the multi-layer diaphragms at regular intervals.

CAUTION!

Prior to replacing the diaphragm, empty the pump and, if necessary, rinse it with appropriate fluid in order to avoid the contact with aggressive and/or toxic media!

CAUTION!

For replacing the diaphragm, the system must be depresssurised!

- During maintenance or repair work, switch off the drive motor of the multi-layer diaphragm pump and secure it against inadvertent or unauthorised reactivation.
- Take appropriate precautions: wear protective clothing, breathing protection and protective goggles. Prepare a container with appropriate fluid right beside the pump to be able to remove splashes of the dosing medium.
- Use an appropriate detergent to rinse the multi-layer diaphragm pump until no residues of the dosing medium can be detected in the pump body. Otherwise, dosing medium may leak when disassembling the pump. Collect the rinsed liquid in a safe way (avoid contact with it) and dispose of it in an environmentally compatible way. This measure is also necessary if the multi-layer diaphragm pump should be returned for repair.

10.4.2 Diaphragm change

The multi-layer diaphragm is to be exchanged as complete pre-assembled diaphragm.

- Set the stroke length adjustment to 0% stroke length (front point)
- Release the fixing screws at the pump body
- Remove the pump body forward as well as the front plate, if necessary.

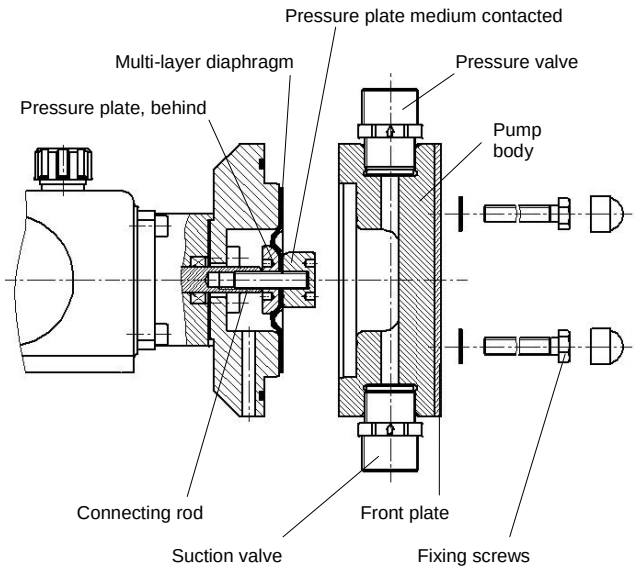

Fig. 36

- Screw the multi-layer diaphragm out of the connecting rod

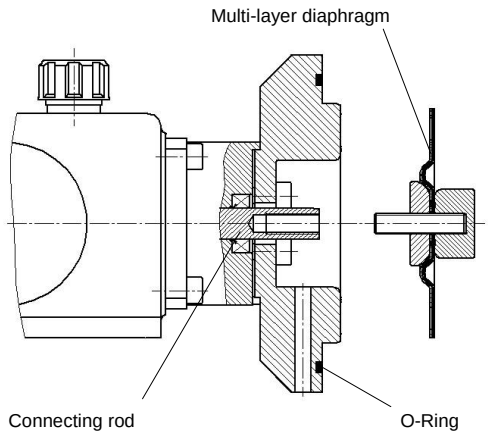

Fig. 37

- O-Ring take out of the base ring
- Check signal device visually for any sign of damage

Assemble the pump in reversed order

- Insert the new O-Ring into the base ring
- The new multi-layer diaphragm is screwed in the connecting rod until it stops. If the holes in the diaphragm are not congruent with the threaded holes in the base ring, then the diaphragm must again be screwed out until it is congruent with the threaded holes.
- Diaphragm central position should be equal to a stroke length of 50%; this can for example be achieved by turning the motor fan.

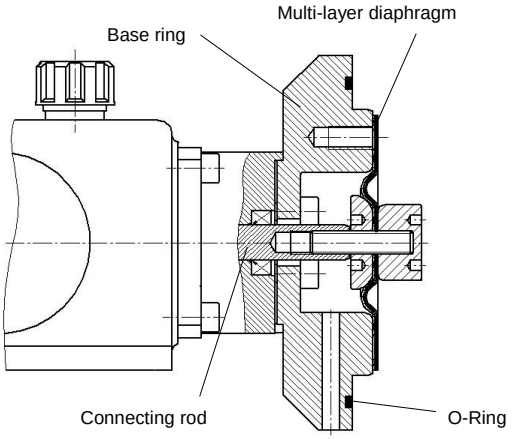

Fig. 38

- Screw on the pump body (tightening torques are mentioned in Chapter 8.1)

When assembling the pump body, please note:
suction valve below, pressure valve above!

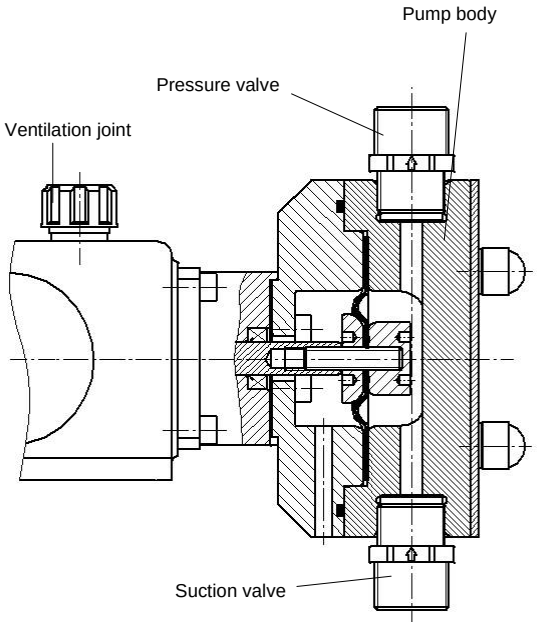

Fig. 39

- Connect the signal devices.

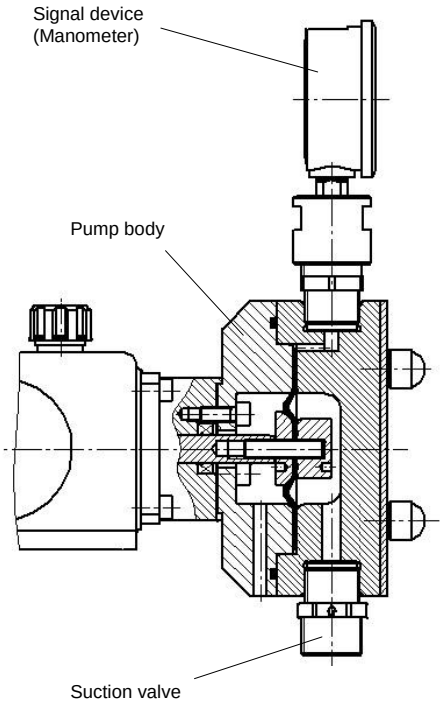

Fig. 40

Before reactivating the pump after a diaphragm replacement, remove the air between the diaphragm layers. Proceed as follows:

a) diaphragm rupture signalization by manometer or pressure switch

- Screw out the signal device
- Apply delivery pressure and have the pump run for a short period (30s)
- Switch off the pump
- Screw in the signal device (see Fig. 40)

.

b) diaphragm rupture signalization by pressure switch ex-design

- Release union nut and remove the signal device (see Fig.41/42).
- Apply delivery pressure and have the pump run for a short period (30s)
- Switch off the pump
- Screw on the signal device:

  Pressure switch is for pump body made of plastic
  - Adjust the pressure switch to the desired position
  - Tighten union nut by hand and hold the insert socket by means of an open-end wrench

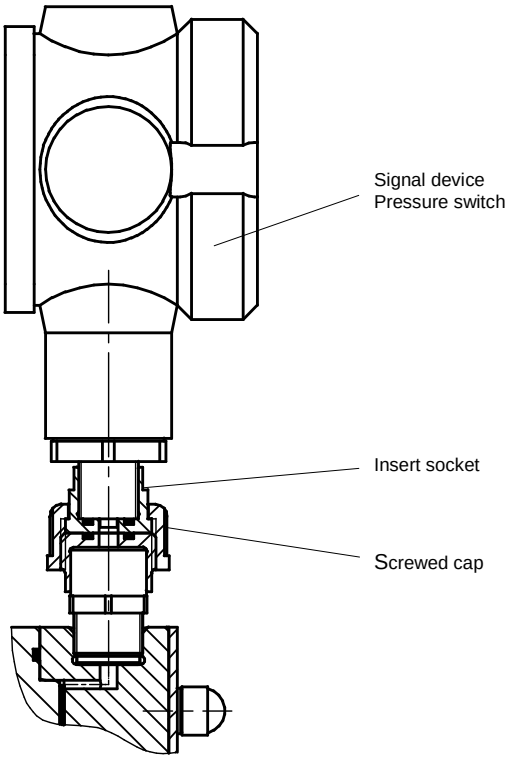

Fig. 41

Pressure switch is for pump body made of stainless steel
- Screw the pressure switch with union nut on the external thread of the socket
- Tighten the union nut with an open-end wrench and while doing so, press against with an open-end wrench at the insert socket. Adjust the pressure switch to the desired position.

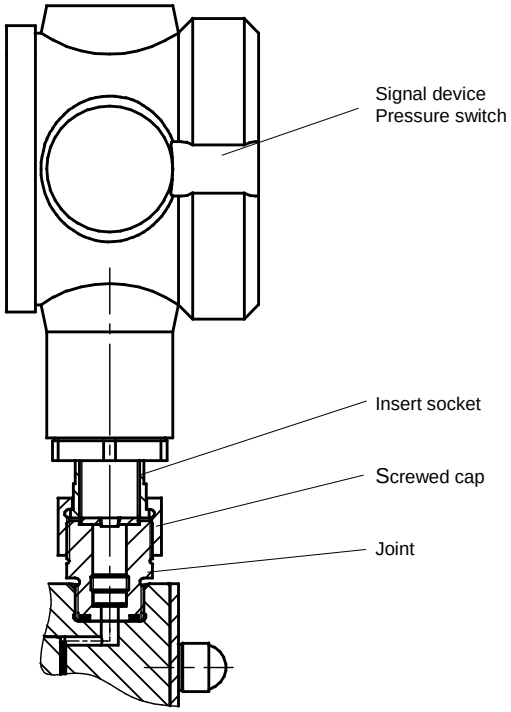

Fig. 42

Add the suction and pressure line and connect the pump to the power supply. The multi-layer diaphragm pump is then again ready for operation

10.5 Oil change

- Check oil level in regular intervals (oil sight glass)

Perform an oil change once a year.
To do so, proceed as follows:

- Open the vent screw (see Fig. 05).
- Prepare an appropriate container. Open the screw plug and drain off the oil.

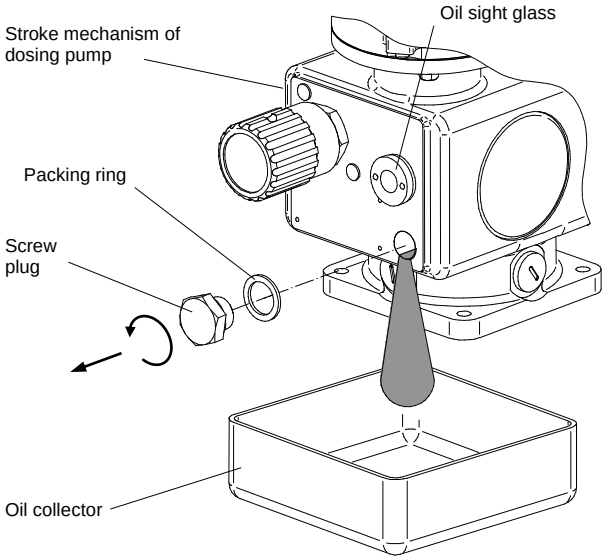

Fig. 43 Drain off (Oil)

- Subsequently, close (fingertight fastening) the boring with screw plug (note the packing ring !)
- Fill the oil into the thread boring of the vent nozzle.
- Type and quantity of the gear box oil see chapter 11
- Screw in the vent screw

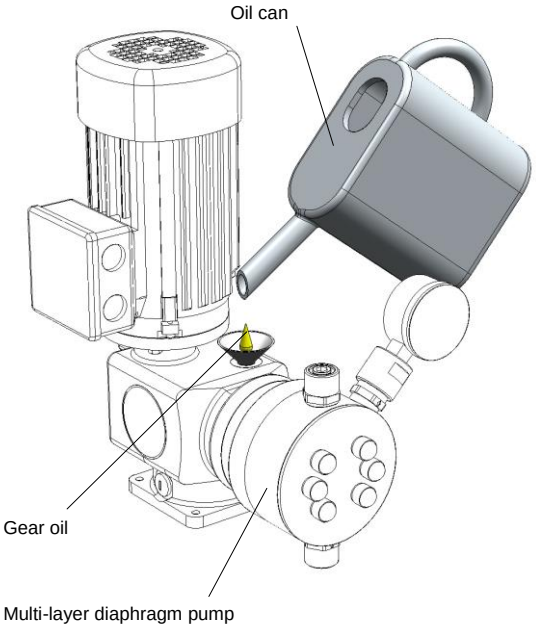

Fig. 44 Filling (Oil)

11 Lubricant

11.1 Lubricant in stroke mechanism

Pump type	Gear oil		Quantity
	Specification	sera use	
409.2 – 11 ML	CLP VG220 DIN51517-3	ARAL Degol BG220	0,3 Liter
409.2 – 17 ML			
409.2 – 30 ML			
409.2 – 45 ML			
409.2 – 72 ML			
409.2 – 110 ML			
409.2 – 150 ML			
409.2 – 220 ML			

Tab. 06 Lubricant in stroke mechanism

12 Fault analysis and corrective action

sera – products are proven technical products which are only shipped after an extensive final test in our works. Should any malfunctions occur, these can be located and corrected easily with the help of the following reference guide (Tab 07).

Fault analysis and corrective action

Type of fault													Possible cause of problem	Rectifiying the problem
Pump does not prime	Pump does not deliver	Capacity not attained	Delivery pressure not reached	Capacity fluctuates	Capacity greater than specified	Motor does not start	Too much vibration in piping	Pump too noisy	Service life of working diaphragms too short	Motor is overloaded	Damage to stroke mechanism / drive	Leaks at pumphead		
●	●	●											Suction height too great	Reduce suction height or suction resistance
●	●	●		●									Suction connection not tight	Check pipe seals and tighten connections
●	●					●						●	Closed shut-off valve in pipe	Open shut-off valves resp. check opening status – dismount pump and check on poss. damages. replace damaged parts
●	●	●											No liquid in dsing tank	Fill supply tank
●	●	●	●	●									Pump valves leaking	Remove and clean pump valves
●	●		●	●									Pump valves (valve seats) damaged	Remove pump valves – check replace if necessary
●	●												Valves wrongly mounted or valve ball missing	Check against sectional drawing to ensure correct assembly. Replace or refit faulty parts
●	●												Filter in suction pipe clogged	Clean suction filter
						●				●			Electrical data of the drive motor do not comply with the network	Check order data. Check electrical installation. Adjust motor to the network on site
		●	●	●		●	●	●	●	●		●	Delivery pressure too high	Check pressure directly above pressure valve with manometer and compare order data resp. with perm. counterpressure
●	●	●	●	●									Foreign bodies in valves	Remove pump valves and clean
				●	●								Delivery on suction side is greater than pressure at the end of delivery line	Check geodesic conditions and insert float valve or pressure retaining valve.
		●	●	●	●	●	●	●	●	●	●	●	Velocity too high owing to geometry of pipework	With a pressure gauge check the velocity on the suction and pressure side of the pump. Compare with order data. If necessary fit pulsation damper
									●			●	Contact materials not resistant and unsuitable	Check medium against original order and quote. If necessary select different wetted parts
●		●	●	●									Viscosity too high	Check viscosity and compare with order confirmation. If necessary reduce concentration and/or raise temperature
	●	●		●									Medium gasses off in suction line	Check geodesic conditions (pipework layout). Increase suction pressure and/or reduce temperature of medium.
●													Air in suction pipe whilst pressure is present in delivery line	Ventilate pressure side or open vent valve (only with FRP-execution, see chapter 6.6)
●	●	●	●	●								●	Pipe connection leaking	Retighten connections according to the type of material. Take care with plastic parts and do not fracture.
●	●	●										●	Temperature too low	Check flowability of the dosing medium. Temperature of the medium may not be lower than –10°C
●	●					●					●	●	Medium frozen in pipe	Dismount pump from system and check for damages – raise temperature
●	●	●	●	●					●			●	Diaphragm rupture	Replace the diaphragm according to the descriptions in Chapter 10.4
●	●	●		●									Air between the diaphragm layers	Remove the air between the diaphragm layers

Tab. 07 (Fault analysis and corrective action)

13 Foreseeable misuse

The following misuse is assigned to the life cycles of the machine.

CAUTION !

Misuse can result in danger to the operating personnel!

13.1 Transport

- Tipping behavior during transport, loading and unloading ignored.
- Weight for lifting underestimated.

13.2 Assembly and installation

- Power supply not fuse protected (no fuse/fuse too large, power supply not conforming to standards).
- No or improper fastening material of the pump.
- Improper connection of the pressure pipes, wrong material i.e. PTFE tape and unsuitable connection pieces.
- Liquid pipes confused.
- Threads overturned/damaged.
- Pipes bent during connection in order to compensate for alignment errors.
- Supply voltage connected without earthed conductor.
- Socket for safe disconnection of the power supply difficult to reach.
- Wrong connecting cables for supply voltage (cross-section too small, wrong insulation).
- Parts damaged (e.g. vent valve, flow meter broken off).
- Wrongly dimensioned pressure and suction pipe.
- Incorrect dimensioned and improperly fastened pump panel (panel broken off).

13.3 Start-up:

- Cover on vent openings (e.g. motor).
- Suction or pressure pipes closed (i.e. foreign matters, particle size, stop valves).
- Start-up with damaged system.

13.4 Operation

- Fault message ignored → faulty dosing / process error.
- Pipes hit, pulsation damper not used → damage to the pipes, medium is leaking.
- Pumped medium contains particles or is contaminated.
- External fuse bridged → no cut off in case of an error.
- Ground wire removed → no cut off by fuse in case of an error, supply voltage directly at the housing.
- Suction height too high, pump capacity too low → process error.

13.5 Maintenance/Repair

- Works carried out which are not described in the operating instructions (works on the stroke mechanism and the assembly pump, electronics opened).
- Prescribed maintenance schedules ignored.
- Use of wrong spare parts/oils (e.g. no **sera** original spare parts, wrong viscosity).
- Improper mounting of spare and wearing parts (e.g. wrong tightening torque for pump body).
- Oil level not checked.
- Use of cables with damaged insulation.
- No shut down / no protection against a restart before maintenance work.
- Pumped medium or utilities during an oil change insufficiently removed.
- Restart without sufficient fastening.
- Valves confused.
- Sensor pipes confused.
- Pipes not connected (e.g. suction- and pressure pipes, gas pipes).
- Gaskets damaged, medium is leaking.
- Gaskets not fitted, medium is leaking.
- Wearing of unsuitable protective clothing / no protective clothing at all.
- Operation of an uncleaned system.
- Pumped medium contaminated with oil.
- Poorly ventilated room.

13.6 Cleaning

- Wrong rinsing medium (material changed, reaction with the medium).
- Wrong cleaning agent (material changed, reaction with the medium).
- Cleaning agent remains in the system (material changed, reaction with the medium).
- Protective clothing insufficient or missing.
- Use of unsuitable cleaning utensils (material changed, mechanical damage by high pressure cleaner).
- Untrained personnel.
- Vent openings clogged.
- Parts torn off.
- Sensors damaged.
- Non-observance of the safety data sheet.
- Control elements actuated.
- Poorly ventilated room.

13.7 Shut-down

- Pumped medium not completely removed.
- Disassembly of pipes with the pump running/with residual pressure.
- Disconnection of the electrical connections in a wrong sequence (ground wire first).
- Disconnection from the power supply not ensured → danger through electricity.
- Poorly ventilated room.

13.8 Disassembly

- Residues of the pumped medium and utilities in the system.
- Use of wrong disassembly tools.
- Wrong or no protective clothing at all.
- Poorly ventilated room.

13.9 Disposal

- Improper disposal of the pumped medium, utilities and materials.
- No marking of hazardous media.

14 Decommissioning

Switch off multi-layer diaphragm pump.

Remove dosing medium from pump head by means of flushing. The flushing agent must be suitable for dosing medium and pump head material.

15 Disposal

Switch the pump off, please see chapter 12 ‘De-commissioning’.

15.1 Dismounting and transport

- Remove all remaining fluid out of the pump, clean neutralize and decontaminate the pump carefully.
- Pack the pump properly and arrange everything for transport.

15.2 Complete disposal

- Drain off all remaining fluid and dispose of them in accordance with the regulations.
- Drain off all lubricants and dispose of them in accordance with the regulations!
- Dismount all materials and send them to a suitable processing company.

CAUTION!

The consignor is liable for any defects resulting from leaking lubricants or residual fluids!

Notes

Notes